110

INSTRUCTION MANUAL

MODEL 110

FUNCTION GENERATOR

and

MODEL 111

VOLTAGE CONTROLLED GENERATOR

WAVETEK

WAVETEK SAN DIEGO, INC.

9045 Balboa Ave., San Diego, CA 92123

INSTRUCTION MANUAL

MODEL 110

FUNCTION GENERATOR

and

MODEL 111

VOLTAGE CONTROLLED GENERATOR

WAVETEK

Box 651, San Diego, Calif., 714-279-2200

Rev L - 8/75

Model 110 and 110B Function Generator

Model 111, VGG Voltage Controlled Generator

WARRANTY

All Wavetek instruments are warranteed against defects in material and workmanship for a period of one year after date of manufacture. Wavetek agrees to repair or replace any assembly or component (except batteries) found to be defective, under normal use, during this period. Wavetek's obligation under this warranty is limited solely to repairing any such instrument which in Wavetek's sole opinion proves to be defective within the scope of the warranty when returned to the factory or to an authorized service center. Transportation to the factory or service center is to be prepaid by purchaser. Shipment should not be made without prior authorization by Wavetek.

This warranty does not apply to any products repaired or altered by persons not authorized by Wavetek, or not in accordance with instructions furnished by Wavetek. If the instrument is defective as a result of misuse, improper repair, or abnormal conditions or operations, repairs will be billed at cost.

Wavetek assumes no responsibility for its product being used in a hazardous or dangerous manner either alone or in conjunction with other equipment. High voltage used in some instruments may be dangerous if misused. Special disclaimers apply to these instruments. Wavetek assumes no liability for secondary charges or consequential damages and, in any event, Wavetek's liability for breach of warranty under any contract or otherwise, shall not exceed the purchase price of the specific instrument shipped and against which a claim is made.

Any recommendations made by Wavetek for use of its products are based upon tests believed to be reliable, but Wavetek makes no warranty of the results to be obtained. This warranty is in lieu of all other warranties, expressed or implied, and no representative or person is authorized to represent or assume for Wavetek any liability in connection with the sale of our products other than set forth herein.

TABLE OF CONTENTS

Section		Page
I	GENERAL DESCRIPTION AND OPERATION	
	General	1-1
	Model 111	1-1
	Models 110 and 111; Models 110B and 111B	1-2
	Models 110 and 110B; Controls and Terminals	1-3
	Power Switch	1-3
	Frequency Range Switch	1-4
	Frequency Dial	1-4
	Selector Switch, Output Attenuator, and D-C Zero Control	1-5
	The 5 Volt Triangle, 5 Volt Sine and 5 Volt Square Outputs (Model 110)	1-5
	The 10 Nsec. Square Output	1-5
	Models 111 and 111B; Controls and Terminals	1-5
	Power/Dial Multiplier Switch	1-5
	Frequency Range Switch	1-6
	Frequency Dial and Frequency Vernier	1-6
	The VCG Input	1-6
	The 5 Volt Triangle, 5 Volt Sine and 5 Volt Square Outputs (Model 111)	1-6
	Model 111B; Main Output	1-7
II	SPECIFICATIONS AND TEST PROCEDURES	
	Specifications	2-1
	Test Procedures	2-12
	General Information	2-12
	Testing Information	2-12
	Other Kinds of Tests	2-12
III	THEORY OF OPERATION	
	Model 110	3-1
	Model 111	3-2
	Circuit Description	3-3
IV	CALIBRATION	
	Model 110; Calibration Procedure	4-1
	Equipment Required	4-1
	Power Supply Board	4-1
	Power Amplifier	4-2

Section		Page
IV	CALIBRATION (Continued)	
	Main Board	4-2
	Sine Waveform Adjustments	4-3
	Check Ranges	4-3
	Model 111	4-3
	Equipment Required	4-3
	Power Supply Board	4-3
	Main Board	4-4
	Power Amplifier	4-5
	Sine Waveform Adjustments	4-5
	VCG Board Frequency	4-5
	Ramp Adjustment	4-6
	Check Ranges	4-6
V	SCHEMATIC DIAGRAMS	

Product Improvement Notice

Wavetek maintains a continuing program to make improvements to their instruments that will take advantage of the latest electronic developments in circuitry and components.

Due to the time required to document and print instruction manuals, it is not always possible to incorporate these changes in the manual.

Wavetek has manufactured your instrument, using metal film 1% tolerance resistors in place of 5% carbon resistors, wherever practical. This results in a substantial improvement in the overall performance of your instrument. Therefore, there may exist a discrepancy between the resistor used to manufacture your instrument and the resistor called out in the Parts List and Schematic Diagrams in this manual.

If field replacement of an affected resistor does become necessary, replacement may be made in accordance with the manual call outs. Wavetek, however, recommends replacement with the same type of resistor used in the manufacture of your instrument, whenever possible.

INSTRUCTION MANUAL ADDENDUM
–For–
MODEL 110 FUNCTION GENERATOR
AND
MODEL 111 VOLTAGE CONTROLLED GENERATOR

1. Page 2-4,
   a. Add to Sine Wave Distortion
      3.0% 600 kHz to 1 MHz
   b. Delete last statement under Square Wave Rise and Fall Time
      5-volt adjustable (Model 110B) less than 100 nsec.
   c. Add to Total Aberrations
      Less than 5% (overshoot, preshoot, etc.) when properly terminated

2. Page 2-10, Delete last statement under Square Wave Rise and Fall Time:
   5-volt adjustable (Model 111B) less than 100 nsec.

3. Page 3-5, line 22, under OUTPUT AMPLIFIER should read:
   "When terminated in 50Ω, the amplifier will deliver 10 volts peak to peak maximum."

4. Delete the last two sentences of paragraph one under OUTPUT AMPLIFIER on page 3-5.

5. Model 110-111 RACKMOUNTS WITH PARALLEL CONNECTORS, FRONT AND REAR ONLY.

   The 10 nsec. square wave has aberrations in excess of existing specs. This is due to reflections from the coaxial cable to the rear panel connector board. If these aberrations are undersirable, they can be reduced by removing the internal coax cable soldered to the front panel 10 nsec. coax connector. This removes the 10 nsec. square wave from the rear panel and the undersirable reflections.

6. ACCEPTABLE SUBSTITUTE FOR ELPAC CAPACITOR ZX3022

   Due to procurement problems, the Elpac ZX3022 capacitor (five per instrument) may be replaced with American Radionics capacitor 5WVTK-2MFW2106F (matched set of five 2 μF capacitors).

ADDENDUM
May 1, 1974

1. Page 4-2 (Rev. 1-68)
   Add under "POWER AMPLIFIER (REAR ETCHED CIRCUIT BOARD)"
   NOTE
   Model 110B has no power amplifier. Check for output of 5 V p-p maximum, 600Ω ±20%.

2. Page 4-5 (Rev. 1-68)
   Add under "POWER AMPLIFIER (REAR ETCHED CIRCUIT BOARD)"
   NOTE
   Model 111B has no power amplifier. Check for output of 5 V p-p maximum, 600Ω ±20%.

SECTION I
GENERAL DESCRIPTION AND OPERATION

GENERAL

The WAVETEK Model 110 Function Generator and Model 111 Voltage Controlled Generator (VCG) are semi-precision sources of waveforms from servo to video frequencies. These units are extremely rugged, completely transistorized portable packages. They feature complete plug-in printed circuit board construction with interchangeable individually calibrated printed circuit boards utilizing silicon semiconductors throughout. The extremely clean and stable waveform signal from 0.005 Hz to 1 MHz (Model 110) and 0.0015 Hz to 1 MHz (Model 111) make these generators highly versatile general purpose pieces of equipment for the laboratory or the field.

The Models 110 and 111 are identical in size and performance except that the Model 111 offers VCG and the additional ramp function. Both Models feature a main output with function selector switch and amplitude attenuator. In addition, they offer simultaneous 5 volt peak to peak 50Ω outputs of sine, square and triangle waveforms; 1 volt, 10 nsec. rise and fall time square wave; and, -10 volt sync pulse. Frequency is controlled by an eight position range switch at 20:1 range, thus providing good overlap.

All outputs may be shorted simultaneously and the generator will continue to oscillate internally with less than 0.5% change in frequency. Voltage may be applied back into the generator so long as this voltage does not exceed the maximum output voltage. Up to ±50 volts may be applied to the VCG input without damage.

MODEL 111

The Model 111 features VCG voltage control of frequency by the internal frequency dial operating in parallel with the VCG input terminals. The generated frequency is the resultant sum of the VCG input voltage and the dial setting. Without an externally applied voltage, the dial governs and the generator operates like a Model 110. By adding a positive voltage to the input terminals, the frequency is increased; by adding a negative voltage to the input terminals, the frequency is decreased. The applied voltage may be either a d-c programming voltage or an a-c frequency modulating voltage. The modulation band width is 100 KHz (it is possible to have a higher modulation frequency than carrier frequency, with a resulting triangle wave that may look like a staircase).

The frequency dial is a continuously variable quality composition potentiometer. An electronic frequency vernier is incorporated for extremely precise frequency adjustment. The vernier covers one minor dial division for one vernier rotation.

In addition to sine, square and triangle, the Model 111 also offers ramp functions. The base line of this ramp signal is zero volts and the ramp duty cycle is 50 per cent. The ramp on the binding post is a positive ramp; the ramp on the BNC connector is a negative ramp.

MODELS 110 and 111; MODELS 110B and 111B

The Models 110 and 111 incorporate a power amplifier which offers a maximum of 32.5 volts peak to peak (+16.25 volts ramp) at the binding post output. An attenuator is included on the input of this output amplifier. The amplifier will supply 30 volts peak to peak (15 volts ramp) into a 600Ω load at maximum output setting. Ten volts peak to peak (5 volts ramp) may be driven into a 50Ω load with undistorted waveforms by rotating the output attenuator counterclockwise until clipping stops.

NOTE

When a relatively small output signal is needed, it is recommended that the output be attenuated by an external pair of resistors to a level approximating that required and the internal attenuator be used as the amplitude vernier. Attenuating the output by 10:1, 100:1, or 1000:1, etc., the use of a pair of external resistors will insure clean waveform quality and good resolution by the internal attenuator in low level applications.

The output amplifier inverts the signals appearing at the BNC connectors. Thus there will be a 180 degree phase shift between the sine, square or triangle output appearing on the binding posts and those on the BNC's. The ramp on the binding post will be simultaneous in time with the ramp on the BNC; however, it is a positive ramp while the BNC is a negative ramp. Both have a base line very near zero volts.

The Models 110B and 111B incorporate an internal battery charger in place of the power amplifier. These units will operate continuously for eight hours (Model 110B) or six hours (Model 111B) from the internal batteries. Both may be charged completely in 16 hours. The charge is designed so that charging occurs while the unit is in operation. A screwdriver adjustment enables the operator to set the desired charge rate. In maximum clockwise position, charge time from discharge to charge is 14 hours. Frequent operation with the instrument plugged into a-c power with the charge rate set this high would result in damage to the batteries. Maximum counterclockwise position of the rear control sets the charge rate to maintain the

batteries at full charge without overcharge. The units are wired so that when plugged into a-c power but turned OFF, a trickle charge maintains the batteries at full charge setting.

The power amplifier used in the Models 110 and 111 is not utilized in the Models 110B and 111B, and is thus bypassed. The signal appearing on the binding post is now a maximum 5 volts peak to peak (-2.5 volts ramp) at approximately 600Ω output impedance. Because no inverting amplifier is used, output signals on the binding post are directly in phase with those on the BNC's.

MODELS 110 and 110B; CONTROLS AND TERMINALS

Controls and outputs for the Models 110 and 110B are identical except for output impedances and voltage levels at the binding posts. For the Model 110, these are 50Ω and 0 to 32.5 volts peak to peak (or, by removal of one jumper, an impedance of 600Ω is obtained). Output impedance of the Model 110B is 600Ω at voltage levels of 0 to 5 volts peak to peak. No zero adjustment is provided for this output on the Model 110B, but internal controls permit setting the balance of each function independently.

Power Switch

The power switch on the Model 110 connects the instrument to either 115 VAC or 230 VAC line power through a 3/4 ampere fuse mounted on the rear panel. (See drawing in Schematic Section of this manual for 115 VAC and 230 VAC connections.)

For the Model 110B, when the power switch is OFF, the batteries are disconnected from the instrument but connected to the charger. The charger is set for a trickle-charge of approximately 3 ma if it is plugged into the power line. In the ON position, the batteries are connected to the instrument for normal operation. If the instrument is not connected to line power, the batteries are discharging; but, if connected, the charger supplies sufficient current to operate the instrument and charge the batteries. The amount of charge current is dependent upon the potentiometer available through the rear panel. In maximum clockwise rotation the charge current is approximately 50 ma. In maximum counter-clockwise rotation the charge current is approximately 15 ma. The 15 ma charge current is recommended for optimum battery life unless a greater charge rate is required by duty use cycle.

CAUTION

If the batteries are allowed to completely discharge, the instrument power supply cannot provide adequate power to simultaneously operate and charge. If this condition exists, the

instrument should be allowed to recharge for at least one hour before it is used in the a-c mode.

Frequency Range Switch

An eight position switch which selects the appropriate timing resistor and capacitor for proper frequency range and selects appropriate compensating resistors for constant dial potentiometer loading, and balanced integrator source resistances.

Frequency Dial

A continuously variable high quality composition potentiometer which allows precise frequency adjustment. The generated frequency is the product of the dial setting and the frequency range switch multiplier; for instance, if the dial setting is 3 and 1/2, and the "Freq Hz" dial is at X100, the frequency generated is 350 Hz.

Selector Switch, Output Attenuator, and D-C Zero Control (rear-mounted screwdriver adjustment)

Output impedance is 50Ω, but output is current limited to drive approximately ±100 ma into a short circuit. Output at maximum clockwise attenuator position is 32.5 volts peak to peak open circuit, and 30 volts peak to peak into 600Ω load. For load impedance less than 600Ω, the attenuator must be rotated counter-clockwise or clipping will result. Maximum undistorted output into a 50Ω load is 10 volts peak to peak.

The output attenuator covers a 30 db range. For output voltages less than 20 db below maximum output, it is recommended that an external attenuator using a pair of resistors be used and the internal attenuator be used for fine control. For a 10:1 attenuator, use a 470Ω resistor in series in a 56Ω shunt with the load. For a 100:1 attenuator, use 1K in series and 10Ω in shunt, or 4.7K in series and 51Ω in shunt (these values are indicative and not critical). The attenuator is located in the input/output amplifier. As a result, the zero adjust will be most critical at minimum setting. The rear-mounted d-c adjustment control should be adjusted with the attenuator in maximum counter-clockwise position.

NOTE

Zero adjust control is a high resolution Zero Adjust Potentiometer not a d-c offset control.

Switch selected sine, square, and triangle waves will have equal peak to peak amplitude for all attenuator settings.

The 5 Volt Triangle, 5 Volt Sine and 5 Volt Square Outputs

These outputs are accurate 5 volt, 50Ω sources balanced about ground. They will drive 2.5 volts peak to peak into a 50Ω load, and supply ±50 ma peak into a short circuit.

The 10 Nsec Square Output

The 10 nsec square output is approximately 1 volt peak to peak open circuit, 0.5 volts peak to peak into a 50Ω load with better than 10 nsec rise and fall time. Always use a 50Ω cable and a 50Ω termination when using this output.

Sync Output

At least -10 volts sync signal of typical 1.5 μsec. pulse width. The pulse occurs once per cycle coincident with positive transition of the 5 volt square wave, and a positive peak of sine and triangle waves.

NOTE

Due to its very narrow pulse width, the sync pulse is difficult to observe at low frequencies. However, it will trigger wide band scopes such as the Tektronix Model 453 at all frequencies.

MODELS 111 AND 111B; CONTROLS AND TERMINALS

Power/Dial Multiplier Switch

This switch incorporates two ON positions, X.3 and X1. This switch, in conjunction with the frequency range switch and the frequency dial, determines the generated frequency. For example, the dial is set a 3 and 1/2, the frequency range switch setting is X100, and the dial multiplier switch at X1, the frequency generated is 350 Hz. With the dial multiplier switch at X.3, the frequency is 105 Hz.

In the Model 111B, when the switch is in the OFF position, the batteries are disconnected from the instrument but connected to the charger. The charger is set for a trickle-charge of approximately 3 ma when the instrument is connected to line power. In the ON position, the batteries are connected to the instrument for normal operation. If the instrument is not connected to the line power, the batteries are discharging; if connected, the charger supplies sufficient current to operate the instrument and charge the batteries. The amount of charge current available is variable through the potentiometer at the rear panel. In maximum counter-clockwise rotation the charge current is approximately 15 ma. The 15 ma charge current is recommended for optimum battery life unless the maximum charge rate is required.

CAUTION

If the batteries are allowed to completely discharge, the instrument power supply cannot provide adequate power to simultaneously operate and charge. If this condition exists, the instrument should be allowed to recharge for at least one hour before it is used in the a-c mode.

Frequency Range Switch

The frequency range switch selects the appropriate timing resistor and capacitor for proper frequency range.

Frequency Dial and Frequency Vernier

The frequency dial is a high quality composition potentiometer providing continuous frequency control. In addition, an electronic vernier control is provided for precise frequency setting. Complete rotation of the vernier changes the frequency approximately one minor dial division for all settings of the dial. The frequency vernier should be in extreme clockwise position (cal) for maximum dial accuracy.

The VCG Input

The VCG input permits remote control of dial frequency and frequency modulation. The calibration factor is 0.5 volts per major dial division. A positive voltage causes an increase in frequency and a negative voltage causes a decrease. The setting of the frequency dial (and the frequency vernier) determines base frequency. The VCG input impedance is 10 KΩ. Up to ±50 volts can be applied to the VCG input without damage.

The 5 Volt Triangle, 5 Volt Sine and 5 Volt Square Outputs

These outputs are accurate 5 volt, 50Ω sources that are balanced about ground. They will drive 2.5 volts peak to peak into a 50Ω load, and supply ±50 ma peak into a short circuit. The ramp output is 2.5 volts. Fixed ramp output is identical with fixed sine, square, and triangle output except that the base line is at zero volt ±25 mv (5 mv typical). Open circuit voltage is a 2.5 volt negative going ramp. Ramp duty cycle is 50%. Negative ramp coincides in time with the negative going portion of the triangle wave and the positive half of the square wave. The ramp signal passing through the output amplifier is amplified and inverted so that the resultant ramp appearing at the binding posts runs from zero to a positive voltage.

Model 111B; Main Output

Because no inverting amplifier is utilized, output waveforms in the switch-selected output are in phase with fixed outputs. Maximum output is 5 volts peak to peak with 600Ω output impedance and -2.5 volts ramp.

SECTION II
SPECIFICATIONS AND TEST PROCEDURES

This section contains specifications for the WAVETEK instruments discussed in this manual and procedures for testing their accuracy. Table 2-1 provides specifications for the Models 110 and 110B Function Generators, and Table 2-2 provides specifications for the Models 111 and 111B Voltage Controlled Generators.

NOTE

Specifications apply 10% to 100% of maximum amplitude setting.

VERSATILITY

Waveforms

Sine ∿, square ⊓, triangle ∧ and sync pulse.

Dynamic Frequency

0.005 Hz to 1 MHz (3.3 min. to 1 μsec).

NOTE: Dial is a high quality composition potentiometer allowing true continuously variable frequency control.

Ranges

X.01 = 0.005 Hz to 0.1 Hz.

X0.1 = 0.05 Hz to 1 Hz.

X1.0 = 0.5 Hz to 10 Hz.

X10 = 5 Hz to 100 Hz.

X100 = 50 Hz to 1 KHz.

X1K = 500 Hz to 10 KHz.

X10K = 5 KHz to 100 KHz.

X100K = 50 KHz to 1 MHz.

Table 2-1. Models 110 and 110B Specifications
Sheet 1 of 5

Six Simultaneous Outputs:

1) ∿, ⊓ or ∿ selectable.

Amplitude adjustable over at least a 50:1 range.

Output impedance 50Ω (600Ω output impedance available by removing one jumper wire).

At least 30 volts peak to peak into an open circuit.

At least 10 volts peak to peak into a 50Ω load (the attenuator should be adjusted counter-clockwise until clipping stops).

Short circuit current ±100 ma.

Model 110B: A maximum of 5 volts peak to peak at 600Ω output impedance.

2) 50Ω ⊓ 0.5 volt peak to peak, 10 nsec. risetime into 50Ω.

3) 50Ω ⊓ 5 volts peak to peak, 15 nsec. risetime.

4) 50Ω ∿ 5 volts peak to peak.

5) 50Ω ∿ 5 volts peak to peak.

6) Sync pulse: At least -10 volts into open circuit; less than 5 μsec. duration.

NOTE: All outputs may be shorted to signal ground without damage to the instrument.

HORIZONTAL PRECISION

Dial Accuracy

±1% of full scale 0.005 Hz to 100 KHz.

±2% of full scale 100 KHz to 1 MHz.

Frequency Stability

Short term: Drift less than ±0.05% of setting for 10 minutes.

Table 2-1. Models 110 and 110B Specifications
Sheet 2 of 5

Long term: Drift less than ±0.25% of setting for 24 hours.

No critical components requiring internal oven.

Jitter

±0.025% cycle to cycle stability.

VERTICAL PRECISION

Frequency Response

Amplitude change with frequency less than 0.1 db 0.005 Hz to 10 KHz, 0.2 db 10 KHz to 100 KHz, 0.5 db 100 KHz to 1 MHz.

Peak to Peak Voltage Accuracy

±1% for 5-volt outputs.

±1% for 30-volt output into a 600Ω load at maximum gain.

±10% for 0.5-volt output into 50Ω.

Amplitude Stability

Short term: ±0.05% of maximum peak to peak values for 10 minutes.

Long term: ±0.25% of maximum peak to peak values for 24 hours.

Symmetry

All waveforms are symmetrical about ground within ±1% of maximum peak to peak amplitude (external zero adjust rear-panel control provided for output number 1).

D-C Offset Stability

Short term: ±0.05% of maximum peak to peak amplitude for 10 minutes.

Long term: ±0.25% of maximum peak to peak amplitude for 24 hours.

Table 2-1. Models 110 and 110B Specifications
Sheet 3 of 5

PURITY

Sine Wave Distortion

Less than:	0.5%	0.005 Hz to 10 KHz.
	1.0%	10 KHz to 100 KHz.
	2.0%	100 KHz to 1 MHz.

Triangle Linearity

Greater than:	99%	0.005 Hz to 100 KHz.
	95%	100 KHz to 1 MHz.

Square Wave Rise and Fall Time

0.5-volt output less than 10 nsec. into 50Ω termination.

5-volt output less than 15 nsec.

30-volt output less than 100 nsec.

5-volt adjustable (Model 110B) less than 100 nsec.

Total Aberrations

Less than 5% (overshoot, preshoot, etc.).

Tilt

Less than 0.5%.

Time Symmetry

All waveforms:	99%	0.005 Hz to 100 KHz.
	98%	100 KHz to 1 MHz.

ENVIRONMENTAL

Temperature

All specifications listed, except stability, are for 25°C ± 5°C.

Table 2-1. Models 110 and 110B Specifications
Sheet 4 of 5

For operation from 0°C to 55°C, derate all specifications by a factor of 2.

MECHANICAL

Dimensions

7-3/4 in. /197 mm wide, 5-1/4 in. /133 mm high, 11-1/2 in. / 292 mm deep.

Weight

7-1/2 lb/3.4 kg net, 12 lb/5.45 kg shipping.

Controls

ON-OFF power switch, frequency range switch, frequency dial, function selector switch, amplitude attenuator, d-c zero adjustment (rear). All-silicon semiconductors, modular plug-in construction.

Power

Model 110: 105 volts to 125 volts or 200 volts to 250 volts, 50 Hz to 400 Hz. Less than 10 watts.

Model 110B: D-C rechargeable ni-cad batteries provided with built-in charger. Eight hours of operation on batteries for every 16 hours of charge; simultaneous operation and charge.

105 volts to 125 volts or 200 volts to 250 volts 50 Hz to 400 Hz. Less than 10 watts.

Table 2-1. Models 110 and 110B Specifications
Sheet 5 of 5

VERSATILITY

Waveforms

Sine ∿, square ⊔, triangle ∧, ramp ⅄ and sync pulse.

Dynamic Frequency

0.0015 Hz to 1 MHz (10 min. to 1 μsec).

Ranges

X.01 = 0.005 Hz to 0.1 Hz.

X0.1 = 0.05 Hz to 1 Hz.

X1.0 = 0.5 Hz to 10 Hz.

X10 = 5 Hz to 100 Hz.

X100 = 50 Hz to 1 KHz.

X1K = 500 Hz to 10 KHz.

X10K = 5 KHz to 100 KHz.

X100K = 50 KHz to 1 MHz.

X.003 = 0.0015 Hz to 0.03 Hz.

X.03 = 0.015 Hz to 0.3 Hz.

X.3 = 0.15 Hz to 3 Hz.

X3.0 = 1.5 Hz to 30 Hz.

X30 = 15 Hz to 300 Hz.

X300 = 150 Hz to 3 KHz.

X3K = 1.5 KHz to 30 KHz.

X30K = 15 KHz to 300 KHz.

Table 2-2. Models 111 and 111B Specifications
Sheet 1 of 6

Seven Simultaneous Outputs:

1) ∿, ⊓, ∿ or ⋀ selectable.

Amplitude adjustable over at least a 50:1 range.

Output impedance 50Ω (600Ω output impedance available by removing one jumper wire).

At least 30 volts peak to peak (15 volts ramp) into an open circuit.

At least 10 volts peak to peak (5 volts ramp) into a 50Ω load (the attenuator should be adjusted counter-clockwise until clipping stops).

Short circuit current ±100 ma.

Model 111B: A maximum of 5 volts peak to peak at 600Ω output impedance (2.5 volts ramp).

2) 50Ω ⊓ 0.5 volt peak to peak, 10 nsec. risetime into 50Ω.

3) 50Ω ⊓ 5 volts peak to peak, 15 nsec. risetime.

4) 50Ω ∿ 5 volts peak to peak.

5) 50Ω ∿ 5 volts peak to peak.

6) 50Ω ⋁ 0 volts to -2.5 volts ramp; 50% duty cycle.

7) Sync pulse: At least -10 volts into open circuit; less than 5 μsec. duration.

NOTE: All outputs may be shorted to signal ground without damage to the instrument.

VCG - Voltage Controlled Generator

Over 20:1 frequency ratio (selectable in ranges of 3:1 allowing excellent range overlap). 4.75 volts input for 20:1 frequency ratio (0.5 volts ±1% per Major dial divison). Input impedance 10K.

Table 2-2. Models 111 and 111B Specifications
Sheet 2 of 6

HORIZONTAL PRECISION

Dial Accuracy

±1% of full scale 0.0015 Hz to 100 KHz.

±2% of full scale 100 KHz to 1 MHz.

NOTE: Dial is a high quality composition potentiometer allowing true continuously variable frequency control.

Electronic Frequency Vernier

One turn for approximately one minor dial division.

VCG Linearity

±0.1% frequency versus input voltage (frequency error ±0.1% of total frequency deviation - best straight line method). 0.0015 Hz to 100 KHz generated frequency. From 10% to 100% of maximum dial frequency.

VCG Bandwidth

100 KHz.

Frequency Stability

Short term: Drift less than ±0.05% of setting for 10 minutes.

Long term: Drift less than ±0.25% of setting for 24 hours.

No critical components requiring internal oven.

Jitter

±0.025% cycle to cycle stability.

VERTICAL PRECISION

Frequency Response

Amplitude change with frequency less than 0.1 db 0.0015 Hz to 10 KHz, 0.2 db 10 KHz to 100 KHz, 0.5 db 100 KHz to 1 MHz.

Table 2-2. Models 111 and 111B Specifications
Sheet 3 of 6

Peak to Peak Voltage Accuracy

±1% for 5-volt and 2.5-volt outputs.

±1% for 30-volt output into a 600Ω load at maximum gain.

±10% for 0.5-volt output.

Amplitude Stability

Short term: ±0.05% of maximum peak to peak values for 10 minutes.

Long term: ±0.25% of maximum peak to peak values for 24 hours.

Symmetry

All waveforms, except ramp, are symmetrical about ground within ±1% of maximum peak to peak amplitude (external zero adjust rear-panel control provided for output number 1).

DC Offset Stability

Short term: ±0.05% of maximum peak to peak amplitude for 10 minutes.

Long term: ±0.25% of maximum peak to peak amplitude for 24 hours.

PURITY

Sine Wave Distortion

Less than:	0.5%	0.0015Hz to 10KHz.
	1.0%	10KHz to 100KHz.
	2.0%	100KHz to 600KHz.
	3.0%	600KHz to 1MHz.

Triangle and Ramp Linearity

Greater than:	99%	0.0015Hz to 100KHz.
	95%	100KHz to 1MHz.

Table 2-2. Models 111 and 111B Specifications
Sheet 4 of 6

Ramp Fall Time

Less than 200 nsec.

Square Wave Rise and Fall Time

0.5-volt output less than 10 nsec into 50Ω termination.

5-volt output less than 15 nsec.

30-volt output less than 100 nsec.

5-volt adjustable (Model 111B) less than 100 nsec.

Total Aberrations

Less than 5% (overshoot, preshoot, etc.).

Tilt

Less than 0.5%

Time Symmetry

All Waveforms:	99%	0.0015 Hz to 100 KHz.
	98%	100 KHz to 1 MHz.

ENVIRONMENTAL

Temperature

All specifications listed, except stability, are for 25°C ± 5°C.

For operation from 0°C to 55°C, derate all specifications by a factor of 2.

MECHANICAL

Dimensions

7-3/4 in. /197 mm wide, 5-1/4 in. /133 mm high, 11-1/2 in. / 292 mm deep.

Table 2-2. Models 111 and 111B Specifications
Sheet 5 of 6

TEST PROCEDURES

GENERAL INFORMATION

Specifications apply only when the dial setting is between 0.5 and 10. Instruments should be within specifications within 30 minutes' warm-up time. All specifications are for 25°C ± 5°C and 105 to 125 volts a-c, 50 Hz to 400 Hz. All measurements must be made as described herein. Frequency stability specifications refer to constant temperature, line voltage, panel setting, and loads; testing must be made after one hour warm-up at defined conditions.

TESTING INFORMATION

All frequency measurements should be made with the function selector switch on sine ∿, output attenuator set in the maximum counter-clockwise most position, all outputs unconnected (and VCG input, Model 111) except the 10 nsec. square wave output which should be connected to a counter through a 50Ω cable using 50Ω termination at the counter. The frequency vernier (Model 111) should be at maximum clockwise position (cal). The generated frequency should be within specifications for all combinations of the range switch and frequency dial.

Time symmetry measurements should be made using this setup and by measuring the positive and negative half cycles of the square wave. The two half cycle measurements should differ by no more than 1% of the total one cycle measurement.

Cycle-to-cycle jitter measurements should be made with this same setup. An oscilloscope with a delaying sweep or frequency counter may be used for cycle-to-cycle time jitter measurement.

VCG linearity should be made by again using the same setup as above, with the addition of a low impedance (50Ω maximum) source connected to the VCG input.

VCG input voltage should be measured with a high accuracy voltmeter such as DVM or a differential voltmeter.

OTHER KINDS OF TESTS

All voltage measurements should be made with an accurate wide band peak measuring device. It is strongly suggested that a Tektronix type W, or type Z plug-in with an appropriate oscilloscope be used for making these voltage measurements. The measuring device should have at least 50KΩ input impedance and sufficient band width so that waveform peaks are accurately

Weight

8 lb/3.6 kg net, 12 lb/5.45 kg shipping.

Controls

OFF X.3-X1 power/dial multiplier switch, frequency range switch, frequency dial, frequency vernier, function selector switch, amplitude attenuator, d-c zero adjustment (rear).

All-silicon semiconductors, modular plug-in construction.

Power

Model 111: 105 volts to 125 volts or 200 volts to 250 volts, 50 Hz to 400 Hz. Less than 10 watts.

Model 111B: D-C rechargeable ni-cad batteries provided with built-in charger. Six hours of operation on batteries for every 16 hours of charge; simultaneous operation and charge. 105 volts to 125 volts or 200 volts to 250 volts, 50 Hz to 400 Hz. Less than 10 watts.

NOTE

The covers of these instruments may be mounted flush with the front panel by removing the cover and replacing it using the alternate set of tapped holes in the spacer bars.

Table 2-2. Models 111 and 111B Specifications
Sheet 6 of 6

measurable. The measurements should be made individually with no loads connected to the instrument.

When making very accurate peak measurements, minor aberrations will be noted on the waveform due to the switching of the square wave. The peak value is that voltage which appears immediately prior to these minor aberrations. Accurate peak waveform measurements shold be made a +1KHz with the dial set at 10. Accurate high frequency measurements are difficult to make and require considerable care in lead connection, current, and cable termination.

Lack of symmetry is defined as the difference in the plus and minus peak voltages. For example: a 5 volt signal with 1% dis-symmetry could read +2.525 volts and -2.475 volts.

All fixed outputs should be measured individually with the function switch on sine ∿, and the amplitude attenuator in maximum counter-clockwise position. The switch selectable output should be measured with the attenuator in maximum clockwise position and the appropriate function selected. Nothing should be connected to the binding posts when making this measurement.

When measuring the selectable output amplitude of the Models 110B and 111B, the measuring device should have at least 500K input impedance. It should be terminated into 600Ω for high frequency measurements. Sine distortion, triangle and ramp linearity, rise and fall time, total aberrations and tilt specifications should be made independently connecting only one output to the appropriate measuring device at a time.

BNC outputs (except sync) should be connected to the measuring device with a 50Ω cable properly terminated for making all high frequency measurements.

The output amplifier, in Models 110 through Model 116, may have a tendency to oscillate when operating in the 100KHz to 1 MHz range into a cable terminated in an open circuit (very high impedance). Oscillation, when it occurs, is due to reflections back into the output amplifier and so, may be affected by signal level and cable length.

GENERAL NOTE

The Test Procedures very specifically define individually making measurements without simultaneous load of the various connectors. Simultaneous loading of all outputs will have only a minor effect on the frequency amplitude and purity performance.

SECTION III
THEORY OF OPERATION

MODEL 110. Refer to the block diagram of the Model 110 Function Generator in Section VI. An understanding of the Model 111 is best accomplished by first studying the Model 110.

A square wave is generated into an integrator composed of a wide band differential d-c amplifier and integrating resistor R with integrating capacitor C. The output of the integrator is fed into the Hysteresis and output switch. The Hysteresis and output switch function like a Schmitt trigger with the limit points set wide apart. As a result they fire when the triangle wave reaches +2.5 volts and -2.5 volts. The firing of the Hysteresis and the output switches reverses the square wave fed into the integrator and the triangle wave reverses direction. The result is simultaneous generation of a square wave and triangle wave of the same frequency with the positive half cycle of the square wave coincident with the negative going portion of the triangle wave.

The frequency of oscillation is determined by the R and C selected by the frequency range switch and by the amplitude of the square wave fed into the integrating resistor R. The ±5 volt square wave is fed to the frequency dial potentiometer. Setting the potentiometer at the top of the dial results in maximum voltage and thus maximum integrating current is generated resulting in maximum frequency. Frequency is directly proportional to the square wave amplitude appearing on the arm of the frequency dial potentiometer.

The sine wave is produced by shaping the triangle wave. The triangle wave is fed into a shaping network composed of resistors and diodes with transistor emitter followers biasing circuitry. As the triangle wave voltage passes through zero, loading of the triangle wave is minimal and thus slope is maximum. As the triangle wave voltage increases successively, diodes with current limiting resistors conduct causing the slope of the output to be less. The resultant waveform resembles a sine wave but is pointed at the top. The diodes are biased by transistor emitter followers whose base emitter junctions are opposite in polarity from the diodes. This provides a first order compensation for drifts due to temperature variations.

The increase in diode current at the peak of the triangle wave causes a pointed voltage pattern on the collectors of the emitter followers. This pointed waveform is combined out of phase with the somewhat pointed sine wave. The resultant waveform is an almost pure sine wave. The circuitry is completely symmetrical about ground using PNP transistors on one side and NPN transistors on the other. The sine wave produced by shaping is considerably less in amplitude than the triangle wave input and is thus amplified to be equal to the triangle wave.

The triangle wave output of the integrator, the sine wave output, and the square wave coupled through an associated amplifier are fed to the function selector switch and also to the simultaneous BNC outputs. The switch is coupled to the attenuator which in turn drives the output power amplifier. In the Model 110B and the Model 111B, this power amplifier is replaced by a 560Ω resistor.

The entire instrument except the power amplifier, runs off a current regulated +6 volts and -6 volts. The power amplifier runs off of an unregulated ±25 volts.

MODEL 111. Refer to the block diagram of the Model 111 Voltage Controlled Generator in Section VI. In the Model 111, unique circuitry is provided whereby the amplitude of the square wave fed to the integrator is controlled by an analog voltage. The integrating resistor R is connected to a PNP and NPN transistor switch which is connected in an inverted configuration. The bases of these transistor switches are driven from the output square wave. Negative square waves cause conduction of the PNP transistor, and positive square waves cause conduction of the NPN. These transistors connected in inverted configuration when in the conduction mode, have in the vicinity of 10 mv drop between their emitter and collector.

The VCG input and the frequency dial both drive an operational amplifier whose output is proportional to, but inverted from, the sum of the input voltages. The first operational amplifier drives the second operational amplifier which is designed for unity gain, but inversion about ground. As a result, a positive voltage appearing on the input causes a negative voltage at the output of the first amplifier and a positive voltage at the output of the second amplifier. A negative square wave thus causes integrating resistor R to be shorted to the negative voltage output of the first amplifier. A positive square voltage causes resistor R to be shorted to the positive voltage output of the second amplifier.

The circuit would be complete and work accurately except for the small drop across the switching transistors. This drop is compensated for by inserting a matching transistor in the feedback loop of the operational amplifiers. The base drive to the compensating transistor is designed to equal the base drive to the switching transistors. The switching transistors and the operational amplifiers must have good high frequency characteristics since square waves up to 1 MHz must be controlled. As a result, the basic circuitry is also capable of a wide band frequency modulation.

The ramp is formed by offsetting the triangle wave so that the positive peaks are at zero d-c. This resultant waveform is shorted to ground by transistor switches during the positive going half cycle. A two-stage clipping circuit is used in order to provide a very flat base line near zero volts. The excellent linearity of the triangle wave is preserved. The high quality ramp signal

is fed through an associated amplifier to the BNC connector and the function selector switch.

CIRCUIT DESCRIPTION

Refer to the Model 110 and 111 Main Board schematic diagrams.

INTEGRATOR, MAIN BOARD

Q1 through Q10 and their associated circuitry make up the wide band d-c integrator amplifier. The "Freq Hz" switch on the front panel selects the appropriate integrating resistors and capacitors for frequency ranging.

Q1 and Q2 are a Darlington input pair for the minus input; Q 4 and Q 3 are a Darlington pair in the plus input. Transistors Q1 through Q4 are low current, high gain, wide band transistors which allow the inputs to operate with less than 40 nano amps of source current. The collectors of Q2 and Q3 work into a complex load made up of R1, R3, R4, C3, and the input impedance of Q5 and Q6. Q5 and Q6 form a differential amplifier stage driving the differential stage made up of Q7 and Q8. The output is taken off single ended at the collector of Q7 through the push-pull emitter follower, Q9 and Q10. CR1 and CR2 provide the bias voltage for Q9 and Q10 to prevent crossover distortion. R8 allows the d-c levels in the two sides of the amplifier to be balanced throughout. The triangle output is connected to pin 1. It is also fed through R22 to the sine converter and to the Hysteresis switch made up of Q25 through Q30.

HYSTERESIS AND OUTPUT SWITCH, MAIN BOARD

The transistors in the Hysteresis switch are connected to form a bi-stable switch. Either the Q25, Q26 side or the Q28, Q30 side can be on but not both at the same time. When the positive going triangle reaches the firing level set by R77, the Q26 side turns on and the Q28 side turns off. The triangle starts its negative slope and when it reaches the firing level set by R78, the Q28 side turns on and the Q26 side turns off. The Hysteresis switch is d-c coupled to the bi-stable output switch made up of Q31 through Q34. The square wave is coupled to pin 10.

The 10 volt peak to peak square wave is differentiated, amplified and clipped by Q35, R96, C25, CR15, R101, C27, and R110 to provide a -10 volt sync spike which has a duration of less than 5 μsec. The sync pulse is coupled to pin 13. The square wave is also coupled to a push-pull emitter follower made up of Q36 through Q39. R104 allows the output amplitude to be adjusted, and R99 adjusts the waveform so that it is symmetrical about ground. Diodes CR16 through CR19 provide temperature compensation. The output of the super emitter follower is a 5 volt peak to peak square wave coupled to pin 11.

SINE CONVERTER AND AMPLIFIER, MAIN BOARD

Transistors Q11 through Q18 are emitter followers in the sine converter that bias and temperature compensate the clipping diodes, CR3 through CR10. Diodes CR3, CR5, CR7, and CR9 clip the positive portion of the triangle at points set by the pots in the base of their associated emitter follower transistors. Diodes CR4, CR7, CR8, and CR10 clip the negative portion of the triangle. Therefore, the input to the sine amplifier is a sine wave with small peaks at the top and bottom. The sine wave is fed to the plus input of the sine amplifier through R64. The sine amplifier is a d-c wide band operational amplifier connected in a potentiometric configuration. R69 is the feedback resistor. The peaks on the sine wave are also seen at the collectors of the emitter followers in the sine converter. These peaks are coupled through R54 and R56 to the minus input of the sine amplifier and peak cancellation occurs in the amplifier giving a clean sine wave at the output. The sine wave is coupled to pin 9. R60 adjusts the sine wave symmetry about ground and R64 adjusts the sine wave amplitude.

POWER SUPPLY AND OUTPUT AMPLIFIER BOARD

A-c voltage is coupled from the transformer to pins 14 and 15 to drive the bridge rectifier made up of diodes CR1 through CR4. Filtering is provided by C1 and C2. Q1 is a transistor connected and operated as a zener diode providing a reference voltage for the +6 volt supply. Q2 and Q3 make up a comparator type differential amplifier. Q2 and Q3 drive Q6 and Q7 which in turn drive the +6 volt pass transistor, Q10. R24 allows the base of Q3 to be adjusted slightly negative with respect to ground. Q1 has a zener voltage of approximately 6.3 volts setting the base of Q2 slightly negative. R24 is adjusted to give an output of +6.00 volts. If the +6.00 volts tries to increase due to a change in line voltage or load current, the collector of Q1 becomes more positive. The base of Q2 becomes less negative (moves in a positive direction with respect to ground) and Q2 draws more current. The collector of Q2 moves less positive and this change is coupled through Q6 and Q7 to the base of Q10. This increases the resistance of Q10, returning the supply to +6.00 volts.

Q4 and Q5 form a comparator type differential amplifier in the -6.00 volt regulator. The base of Q4 is returned to ground through R6. The divider of R26 and R27 between the plus and minus 6 volt supplies sets the base of Q5 at ground. R9 allows a small adjustment of the currents in Q4 and Q5 to set the output and -6.00 volts. An increase in the -6 volts due to line voltage variation or load current variation, results in the base of Q5 moving negative. The collector of Q5 moves less negative (in a positive direction). This change is coupled to the bases of Q11 and Q12. Q11 and Q12 form a Darlington connected pass transistor pair for added gain. The positive going change, increases the resistance of Q11 and Q12, returning the output to -6.00 volts.

OUTPUT AMPLIFIER

Q13 through Q18 form an operational output amplifier with a gain of approximately -6 set by feedback resistor R37 and the input resistor made up of R31 and R32. Transistors Q13 and Q14 are a differential input stage driving a second differential stage of Q15 and Q16. The output is taken off single ended at the collector of Q16 and coupled to the push-pull emitter follower, Q17 and Q18. Diodes CR5 and CR6 provide bias for the push-pull emitter follower to prevent crossover distortion. The output is coupled through R50 and R51 to pin 3. C10 and C11 allow the amplifier to be high frequency compensated and are adjusted to give the best Gaussian response when a 1MHz square wave is applied. Ac is coupled from the transformer to pins 1 and 2 and drives the bridge rectifier made up of diodes CR7 through CR10. The outputs of the bridge rectifier are filtered by C14 and C15 providing the supply voltages for the output amplifier. R41 is the dc balance control allowing the output to be adjusted for symmetry about ground. R41 is a screwdriver adjustment available from the rear panel. DC OFFSET MODIFICATION: To convert the dc Balance control, R41, to a dc Offset control, remove R40 and R42, 10K 1% and replace with 2K 5% carbon resistors. R41 will now serve as a dc offset control allowing the power amplifier output to be offset approximately ±5vdc. It should be remembered that using an offset control limits the available peak output signal. The output will deliver 100ma into a short circuit and 32.5 volts peak to peak into an open circuit. When terminated in 600Ω, the amplifier will deliver 30 volts peak to peak. When terminated in 50Ω, the amplifier will deliver 10 volts peak to peak. When offset +5vdc, the output when terminated in 600Ω is only capable of swinging +10 volts peak. When offset +5vdc and terminated in 50Ω, the output is at its positive going limit point.

BATTERY REGULATOR BOARD

The battery regulator delivers + and - 6 volts dc to the Models 110B and 111B from a pack of 1.2 ampere-hour rechargeable Nickel Cadmium batteries. The +6 and -6 volt regulators are equivalent circuits and operate in the same manner as the ac regulators on the standard supply board. Q13 is the series pass transistor for the + supply and Q21 is the series pass transistor for the - supply. Q17 and Q25 act as zener references for the two supplies. R19, Q9 and CR9 make up the "starting" circuit. This assures that the supplies achieve full output when first turned on. R27, Q14 and R42, Q22 provide "current limiting" circuit which engages when the voltage across R27 (or R42 for - supply) reaches approximately .6 volts. Q14 (Q22 for - supply) conducts and limits the current through the series pass transistor. This occurs at approximately 340ma.

Transistors Q1 through Q7 make up the charging circuit. The batteries are always being charged as long as SW1 is on and the line cord is plugged in an ac source. The transformer delivers center-tapped ac to pins 1 and 2. The ac is rectified by diodes CR1, CR2, CR3 and CR4 and filtered by C1 and C2,

providing +24 and -24 volts dc. R10, R11, R14 and R15 sample the charging current through the batteries and provide forward bias to Q6 and Q7 through divider R8, R9, R13 and potentiometer R12. When potentiometer R12 is turned maximum counter-clockwise, the current through the current sampling resistors should be approximately 40ma to bias Q6 and Q7 on. When this occurs the current through Q1, Q2, Q3 and Q4 is reduced and an equilibrium charge rate is reached. Turning R12 fully clockwise adjusts the bias on Q6 and Q7 such that approximately 120ma of charge current is required for equilibrium. Charge rate is adjustable from the rear panel.

This method sampling the battery current provides an essentially constant charge rate regardless of load current. It also yields an overall negative temperature coefficient which is necessary for extended battery life.

When SW1 is in the OFF position, and the power cord is connected to an ac source, R6 and R18 provide a "trickle" charge of approximately 6ma. This maintains the batteries at full charge during idle periods.

Since there is no 30 volt output amplifier in the battery instruments, the attenuator wiper arm is connected to the output binding post through a 470Ω resistor. This provides a maximum output of 5 volts peak to peak at 600Ω output impedance (2.5 volts ramp).

MODEL 110, FRONT PANEL

The Model 110 front panel board has the frequency ranging capacitors and resistors with their associated switch, the frequency dial potentiometer, the output amplifier function selector switch and attenuator potentiometer, the five fixed output connectors, and the power amplifier output connectors.

The output of the power amplifier is available on pin 19 and is coupled through R28 to the front panel. C13 attenuates those frequencies beyond the band pass of the power amplifier to insure clean waveforms. R30 is normally jumpered. The parallel resistance of R28 and R29 in series with the parallel resistance of two 49.9Ω resistors on the power supply and output amplifier board make up the parallel resistance of the power amplifier. The jumper around R30 is removed when a 600Ω output resistance is desired. The fixed amplitude triangle, sine, sync and the two square wave outputs are fed to BNC connectors. Resistors R17, R18 and R21 set the output resistance of the sine, triangle and 5 volt square wave outputs. R25 and R23 attenuate and establish the output resistance of the 10nsec. square wave output. C8, C9, C11, C12 and R24 are high frequency roll-off components to insure clean waveforms. The 10 volt peak to peak square wave is also fed to the top of the frequency dial potentiometer. The frequency dial potentiometer attenuates the square wave and drives the selected integrating resistor. R16 insures that a square wave is delivered to the integrator when the frequency dial is turned fully clockwise. R20 provides an initial offset current to start

the Model 110 when the unit is first turned ON.

Wafers 1 and 2 of the frequency hertz switch select the appropriate integrating capacitors and resistors for the different frequency ranges. Wafer 3 selects resistors to ground from the center arm of the frequency dial potentiometer so that the dial potentiometer has the same resistive loading when different integrating resistors are selected. Wafer 4 selects resistors for the plus input of the integrator when different integrating resistors are used so that the source current in the + and - inputs of the integrator flow in the same resistances and do not develop an offset voltage.

MODEL 111, FRONT PANEL

The Model 111 front panel is similar to the Model 110 front panel with the addition of the VCG input connectors, the frequency vernier control, the X.3-X1 switch and the ramp output connector. In addition, the dial rather than attenuating the square wave and driving the integrator, attenuates the +6 volt supply voltage and provides an input to the first VCG amplifier. The frequency vernier is returned through R30 to -6 volts. The center arm of the vernier potentiometer provides a second input to the first VCG amplifier. In the "cal" position, the vernier potentiometer is fully clockwise and there is no vernier input to the VCG. In the counter-clockwise position of the vernier, a negative voltage is applied to the VCG and the frequency is reduced by approximately one minor dial division. The frequency hertz switch selects the appropriate integrating capacitors and resistors like the Model 110; however, the added X.3-X1 switch allows an added resistor to be placed in series with the selected integrating resistor when this switch is in the X.3 position. The added resistor is of such a value as to reduce the frequency to .3 of its X1 value.

MODEL 111, VCG BOARD

Refer to the VCG schematic. The two VCG amplifiers are similar operational inverting amplifier configurations. The basic operational amplifier is a μA702C integrated circuit. IC1 is the first inverting operational VCG amplifier, and serves as the main frequency control. The dial voltage from the front panel is available on pin 9 and applied through R6 to the summing node of the operational amplifier.

The voltage from the vernier potentiometer on the front panel is available on pin 8 and applied through R5 to the summing node of the operational amplifier. Any voltage applied to the front panel VCG input connector is applied to pin 4 through the potentiometer, R8, and the resistor, R7, to the summing node of the operational amplifier. The resultant output is the sum of the input voltages.

In the case of the more complex Models 115 and 116, a phase lock voltage is present on pin 6, and coupled through the filter network made up of R1, R2,

R3, C1 and C2 to the summing node of the operational amplifier. The components are not added in a Model 111.

R4 is not included on the VCG board in the other models. R8 allows a calibration of the effect of a VCG voltage applied on the front panel to the output frequency of the instrument. CR1 and CR2 provide protection in case of an over voltage applied at the VCG input terminal.

R9, R10 and R11 provide a zero adjust network for the non-inverting input to the operational amplifier. R51, R52 and R53 provide source current for the input of the first amplifier allowing summing node zero adjustment. R12 and R13 are the feedback resistors in the first operational amplifier. R13 is adjusted for frequency calibration at the low end of the dial.

Pin 7 is the output point of the operational amplifier and Q1 serves an emitter follower to provide added current swing in the negative direction at the output of the first VCG amplifier. The output at the emitter of Q1 is coupled through saturated transistor Q3 to the feedback resistor R13 and also to the input resistors of the second VCG amplifier made up of R14 and R15.

The square wave output from the output switch on the Main Board is available on pin 13, and applied through R17 to the base of Q2. When the square wave is negative Q2 is turned on and saturated and the output of the first VCG amplifier is coupled through Q2 to pin 7, the VCG out terminal.

When the square wave is positive, Q2 is turned off. Q2 and Q3 serve as inverted switches. Q2, operating as an inverted switch, has a very low saturation voltage; however, to compensate for this voltage, Q3 is placed in the feedback loop of the first operational amplifier. This also temperature compensates the first VCG amplifier.

The first operational amplifier has a gain of approximately 3/5 with respect to the dial input, while the second operational amplifier has a gain of unity. The output of the first VCG amplifier is coupled through R14 and R15 to the summing node of the first operational amplifier.

R25 serves as a feedback resistor in the second operational amplifier. Q4 and Q5 serve the same purpose in the second operational amplifier as Q2 and Q3 in the first. However, the output of the second operational amplifier is moving positive, therefore, NPN transistors are used.

When the square wave from pin 13 is positive, Q4 is turned on and saturated coupling the output of the second VCG amplifier to pin 7, the VCG out terminal. Therefore, the signal on pin 7 is a square wave whose frequency is determined by the switching rate of the output switch set on the Main Board and whose amplitude is dependent on the levels at the output of the two VCG amplifiers.

Since the second VCG amplifier has a unity gain, it will provide an output of opposite polarity but of the same magnitude as the output of the first VCG amplifier. The square wave on pin 7 is that square wave applied to the input of the integrator on the Main Board and in turn determines the frequency of the generator.

R46 and R24 serve as the zero adjust control for the second VCG amplifier. R14 allows adjustment of the symmetry at the high end of the dial, while R46 allows adjustment of the output frequency symmetry at the low end of the dial.

IC1 and IC2, the two integrated circuits, require a +12 volt supply at pin 8. The positive high voltage supply from the power amplifier on the power supply and power amplifier board is coupled to pin 5 of the VCG board, on to the collector of Q6 and in turn, to pin 8 of both the integrated circuits.

Q6 is a transistor connected and operated as a 6 volt zener diode. The emitter of Q6 is returned to +6 volts; therefore, its collector will be 6 volts above this level or +12 volts with respect to ground. Q6 thus serves as the +12 volt regulating element for the supply for the integrated circuits. When properly calibrated the system is so well balanced that it cannot start when the machine is first turned on. The square wave output from the VCG clamp transistors on pin 7 drives the input to the integrator.

R22 is added to provide an initial unbalance to allow the integrator to start. Once the machine is running, resistors R18 and R28 offset this unbalance introduced by R22 and the system is once again balanced.

MODEL 111, RAMP CIRCUIT

The triangle wave is available on pin 1 and is offset and attenuated by resistors R31, R32, R33, R34, and R35 so that its most positive excursion is 0 volts d-c and its most negative excursion is -2.5 volts. Transistors Q7 and Q8 are turned on and saturated by the negative going portion of the square wave applied to their bases through R37 and R38. When turned on, Q7 and Q8 chop the positive going portion of the offset triangle to ground. The result is the negative going 2.5 volt ramp in phase with the negative going portion of the triangle output. The ramp is delivered to pin 12 through the two emitter followers Q15 and Q16. The two opposing base to emitter voltages insure that the ramp starts at ground and that the emitter followers temperature compensate each other.

SECTION IV
CALIBRATION

MODEL 110; CALIBRATION PROCEDURE

EQUIPMENT REQUIRED

1. Voltmeter, 1% accuracy, 1 mv resolution (WAVETEK Model 201 or equivalent).

*2. Oscilloscope, Tektronix 530 series or equivalent.

*3. Plug-in, Tektronix type W or equivalent.

4. Plug-in, Tektronix type CA or equivalent.

5. Frequency counter, 5 digit resolution.

6. Distortion analyzer, Hewlett Packard Model 330C or equivalent.

7. Two only 50Ω cables with BNC connectors, 50Ω termination.

*If Tektronix scope and type W are not available, any peak reading device with an accuracy of 1% or better can be used.

Remove cover from instrument.

POWER SUPPLY BOARD (REAR ETCHED CIRCUIT BOARD)

Two 100 μf bypass capacitors are located in the bottom of the instrument; these are filter capacitors for the +6 volts and -6 volts power supplies. The capacitor toward the rear of the instrument is in the +6 volt supply and the other is in the -6 volt supply. The capacitor leads are convenient voltage test points. Connect an appropriate measuring device between the end marked plus (+) of the rear 100 μf capacitor and circuit ground. Adjust R24 for +6.00 volts ±1 mv. Move the measuring device to the other capacitor between the end marked minus (-) and circuit ground. Adjust R9 for -6.00 volts ±1 mv. To compensate for the effects of interaction, repeat these adjustments.

There is no adjustment in the +24 and -24 volt supplies.

Typical 120 cycle ripple in the ±6 volt supplies is less than 25 mv.

Typical 120 cycle ripple in the ±24 volt supplies is less than 500 mv.

MAIN BOARD (SECOND ETCHED CIRCUIT BOARD FROM FRONT PANEL)

1. Set range at X10KHz at top of frequency dial. Monitor the fixed triangle output and adjust R4 for minimum ringing on triangle. Set range to X100KHz and readjust R4 for linearity of the triangle at 1MHz. It may be necessary to repeat adjustments of R4 several times to insure optimum triangle linearity at 1MHz and minimum ringing at 100KHz.

2. Rotate the dial to the extreme clockwise position. Connect a lead between the center arm of the dial potentiometer and circuit ground. Install a 100K resistor between pin 1 and pin 3 of the main board. Observe integrator output with the appropriate indicating device at the junction of R17 and R18. Adjust R8 for zero volts at X100, extreme bottom of the dial. Remove jumper wire and 100K resistor.

3. Using Tektronix scope and type W plug-in, observe triangle at front panel connector, open circuit. Adjust R78 in the switch set for the triangle break at exactly -2.50 volts. Use comparison voltage on the type W plug-in and adjust R77 for the triangle break 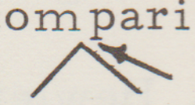 at exactly +2.50 volts. To compensate for effects of interaction, repeat the adjustments.

4. Observe the 15nsec. square wave for leading edge spikes with a 50Ω cable terminated into 50Ω. Adjust R104 for plus and minus 2.5 volts ±1mv. Adjust R99 for symmetry about ground. Tolerance on spikes is 5% of the total peak to peak amplitude. Set the range switch X100, rotate the dial, measuring the frequency at the 10nsec. BNC connector with a 50Ω cable and 50Ω termination and counter. Set the dial reading to 10 (1000Hz) and tighten the setscrew. Set the dial at 1 and adjust R8 for time symmetry.

5. Observe the 10nsec. square wave output on an oscilloscope to be free of excessive leading edge spikes, X100K top of the frequency dial, using a 50Ω cable terminated in 50Ω.

POWER AMPLIFIER (REAR ETCHED CIRCUIT BOARD)

Set output amplifier function selector front panel switch on square wave. Set attenuator fully clockwise. Observe front panel output GR connector on oscilloscope open circuited and adjust R31 for a 32.5 volt peak to peak square wave.

Adjust square wave with output attenuator fully counter-clockwise for symmetry about ground with R41. Adjust 1MHz square wave into open circuit with C11 for an optimum square wave with no overshoot. Check for less than 100nsec. rise time. Check for 30 volts into 600Ω, and 10 volts into 50Ω.

SINE WAVEFORM ADJUSTMENTS (SECOND ETCHED BOARD FROM THE FRONT PANEL)

Place the main board on extended cable. Observe the sine wave at the BNC connector, open circuited. Using a Tektronix scope and type W plug-in, set the frequency dial at 10, range X100.

Adjust R64 for sine out of ±2.5 volts. Adjust R60 for sine symmetry about ground. Using distortion analyzer, adjust R20, R24, R30, R33, R38, R41, R46 and R49 for minimum harmonic distortion. Readjust R64 and R60 for amplitude and symmetry about ground.

CHECK RANGES (FRONT PANEL BOARD, FIRST ETCHED CIRCUIT BOARD)

Check all fixed ranges for frequency tracking. Trim resistors have been installed on individual ranges for tracking. Adjust C3 for proper tracking on X10K range. A trim resistor has been installed between position 3 and position 5 on wafer 1 of the range switch for proper tracking on X1K range. Adjust C1 for proper tracking on X100K range.

MODEL 111; CALIBRATION PROCEDURE

EQUIPMENT REQUIRED

1. Voltmeter, 1% accuracy, 1mv resolution (WAVETEK Model 201 or equivalent).

*2. Oscilloscope, Tektronix 530 series or equivalent.

*3. Plug-in, Tektronix type W or equivalent.

4. Plug-in, Tektronix type CA or equivalent.

5. Frequency counter, 5 digit resolution.

6. Distortion analyzer Hewlett/Packard Model 330C or equivalent.

7. Two 50Ω cables with BNC connectors, 50Ω termination.

*If Tektronix scope and type W plug-in are not available, any peak reading device with an accuracy of 1% or better can be used.

Remove cover from the instrument.

POWER SUPPLY BOARD (REAR ETCHED CIRCUIT BOARD)

Two 100μf bypass capacitors are located in the bottom of the instrument

which are filter capacitors for the +6 volts and -6 volts power supplies. The capacitor toward the rear of the instrument is in the +6 volt supply, and the other is in the -6 volt supply. The capacitor leads are convenient voltage test points. Connect an appropriate measuring device between the end marked plus (+) of the rear 100μf capacitor and circuit ground. Adjust R24 for +6.00 volts ±1mv. Move the measuring device to the other capacitor between the end marked minus (-) and circuit ground. Adjust R9 for -6.00 volts ±1mv. To compensate for the effects of interaction, repeat these adjustments.

There is no adjustment in the +24 and -24 volt supplies.

Typical 120 cycle ripple, ±6 volt supplies is 250μv.

Typical 120 cycle ripple, ±24 volt supplies is 250mv.

MAIN BOARD (SECOND ETCHED CIRCUIT BOARD FROM FRONT PANEL)

1. Set range at X10KHz at top of frequency dial. Monitor the fixed triangle output and adjust R4 for minimum ringing on triangle. Set range to X100KHz and readjust R4 for linearity of the triangle at 1MHz. It may be necessary to repeat adjustments of R4 several times to insure optimum triangle linearity at 1MHz and minimum ringing at 100KHz.

2. Set the generator at X100, the extreme bottom of the frequency dial. Use a jumper to short pin 7, VCG board to circuit ground. Install a 100K resistor between pin 1 and pin 3 of the main board. Observe the integrator output with an appropriate indicating device at the junction of R17 and R18. Adjust R8 for zero volts. Remove the jumper wire and the 100K resistor.

3. Using Tektronix scope and a type W plug-in, observe the triangle at the front panel connector, open circuit. Adjust R78 in the switch set for the triangle break 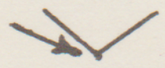 at exactly -2.50 volts (use comparison voltage on the type W plug-in). Adjust R77 for the triangle break 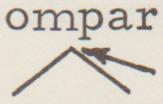 at exactly +2.50 volts. To compensate for the effects of interaction, repeat the adjustments.

4. Observe the 15nsec. square wave for leading edge spikes with a 50Ω cable terminated into 50Ω. Adjust R104 for + and -2.5 volts ±1mv. Adjust R99 for symmetry about ground. Tolerance on spikes is 5% of the total peak to peak amplitude.

5. Observe the 10nsec. square wave output on an oscilloscope to be free of excessive leading edge spikes (X100K top of the frequency dial, using 50Ω cable terminated into 50Ω).

POWER AMPLIFIER (REAR ETCHED CIRCUIT BOARD)

Set output amplifier function selector (front panel) switch on square wave. Set the attenuator fully clockwise. Observe the front panel output GR connector on an oscilloscope open circuited and adjust R31 for a 32.5 volt peak to peak square wave.

Adjust the square wave with the output attenuator fully counter-clockwise for symmetry about ground with R41. Adjust 1MHz square wave into an open circuit with C11 for optimum square wave with no overshoot. Check for less than 100nsec. rise time. Check for 30 volts into 600Ω, and 10 volts into 50Ω.

SINE WAVEFORM ADJUSTMENTS (SECOND ETCHED BOARD FROM FRONT PANEL)

1. Using a Tektronix scope and type W plug-in, set the frequency dial at 10, range at X100. Place the main board on extender cable. Observe the sine wave at the BNC connector.

2. Adjust R64 for sine wave out of ±2.5 volt ±1mv. Adjust R60 for sine symmetry about ground. Using a distortion analyzer, adjust R20, R24, R30, R33, R38, R41, R46 and R49 for minimum harmonic distortion. Readjust R64 and R60 for amplitude and symmetry about ground.

VCG BOARD FREQUENCY (THIRD ETCHED BOARD FROM FRONT PANEL)

(For instruments having first amplifier summing node zero adjustment.)

Measure ±6 volt power supplies (refer to Power Supply Board Calibration Procedure, page 4-11).

1. With Frequency Hertz switch at X100, Frequency Vernier full CW, set Frequency Dial to 10, measure voltage at potentiometer wiper arm (pin 9 on the VCG Board) to be +5.750 volts ±2mv. If this condition is not met, reinstall the dial.

2. Dial tracking adjustment:

With Frequency Hertz switch X100, Vernier full CW, set dial to 10 and adjust R13 for 1000Hz and R14 for time symmetry. Set the dial to 1. By alternately shorting and opening the VCG input terminals, adjust R9 for a minimum frequency shift.

NOTE

Frequency shift is caused by non-zero summing node at the first VCG amplifier. R9

is used to adjust this for zero volts and no frequency shift.

Adjust R51 (source current potentiometer) and R46 for 100Hz and time symmetry. Repeat steps for adjustment of R13 and R14 and adjustment of R9 until frequency, symmetry and source current are all calibrated at the top (1000Hz) of the dial and the bottom (100Hz) of the dial.

3. VCG input calibration:

With Frequency Hertz switch X100, Frequency Vernier Potentiometer full CW, adjust dial for 100Hz on frequency measuring device. Apply +4.500 volts on the VCG input on the front panel and adjust R8 for 1000Hz.

RAMP ADJUSTMENT

Observe the ramp output at the BNC connector with 50Ω cable terminated into 50Ω load. Adjust R34 so that the signal is neither 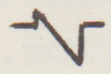 nor 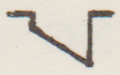 but is 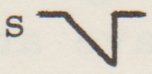 .

Adjust R33 for -2.5 volts peak ramp output into an open circuit.

CHECK RANGES (FRONT PANEL BOARD, FIRST ETCHED CIRCUIT BOARD)

Check all fixed ranges for frequency tracking. Trim resistors have been installed on individual ranges for tracking. Adjust C5 for proper tracking on X10K range. A trim resistor has been installed between position 3 and position 5 on wafer 1 of the range switch for proper tracking on the X1K range. Adjust C1 for proper tracking on X100K range.

SECTION V
SCHEMATIC DIAGRAMS

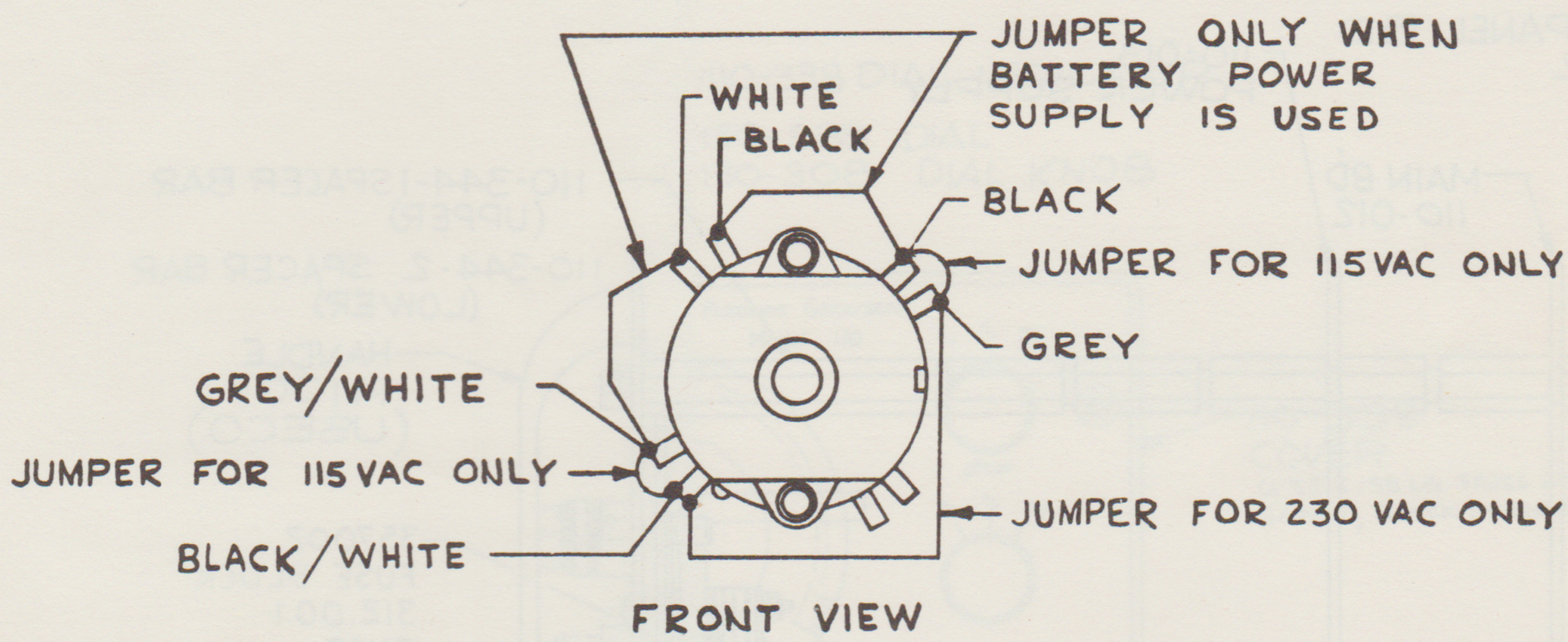

115/230 V SWITCH WIRING

115/230 VAC Switch Wiring Schematic Diagram

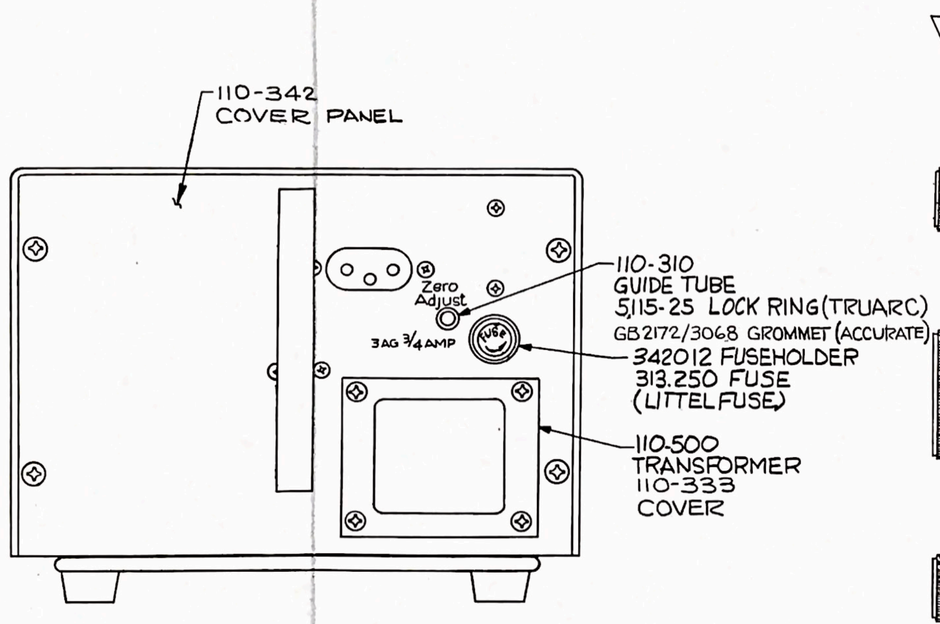

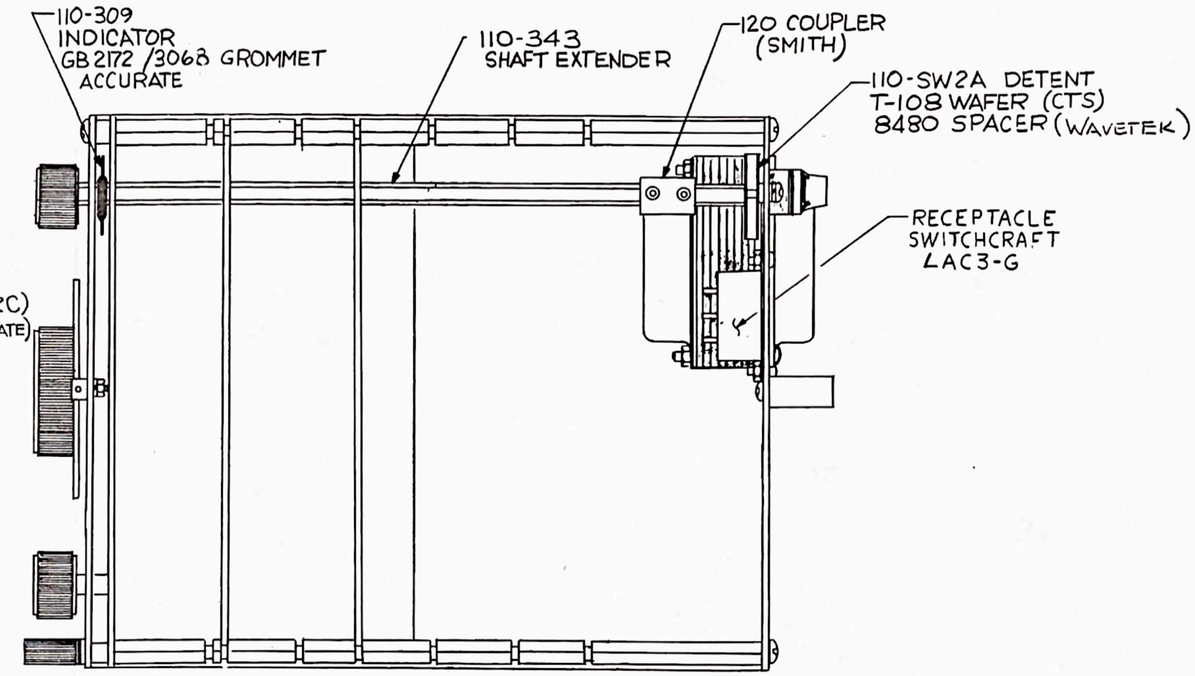

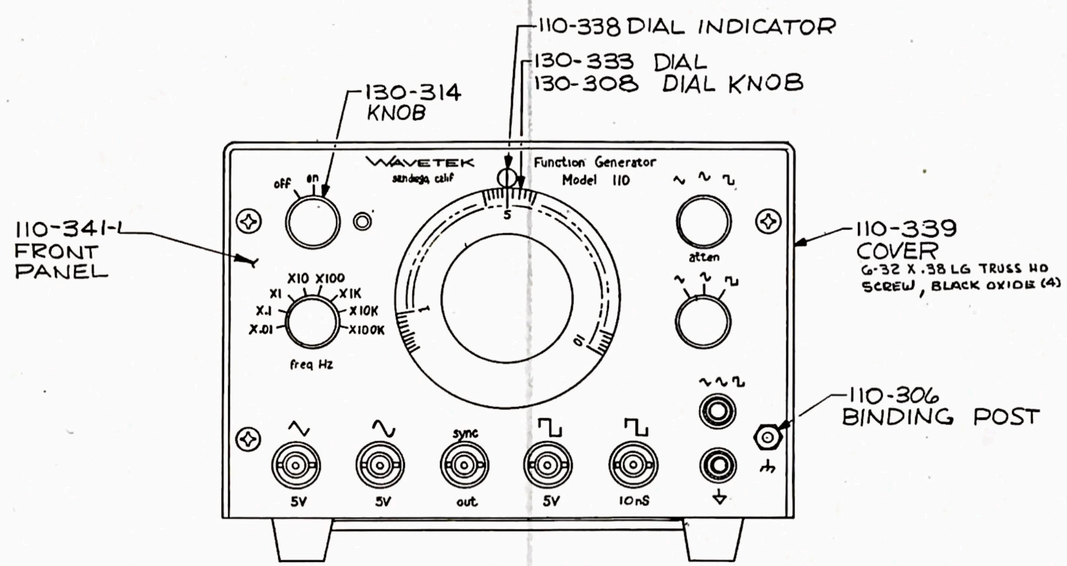

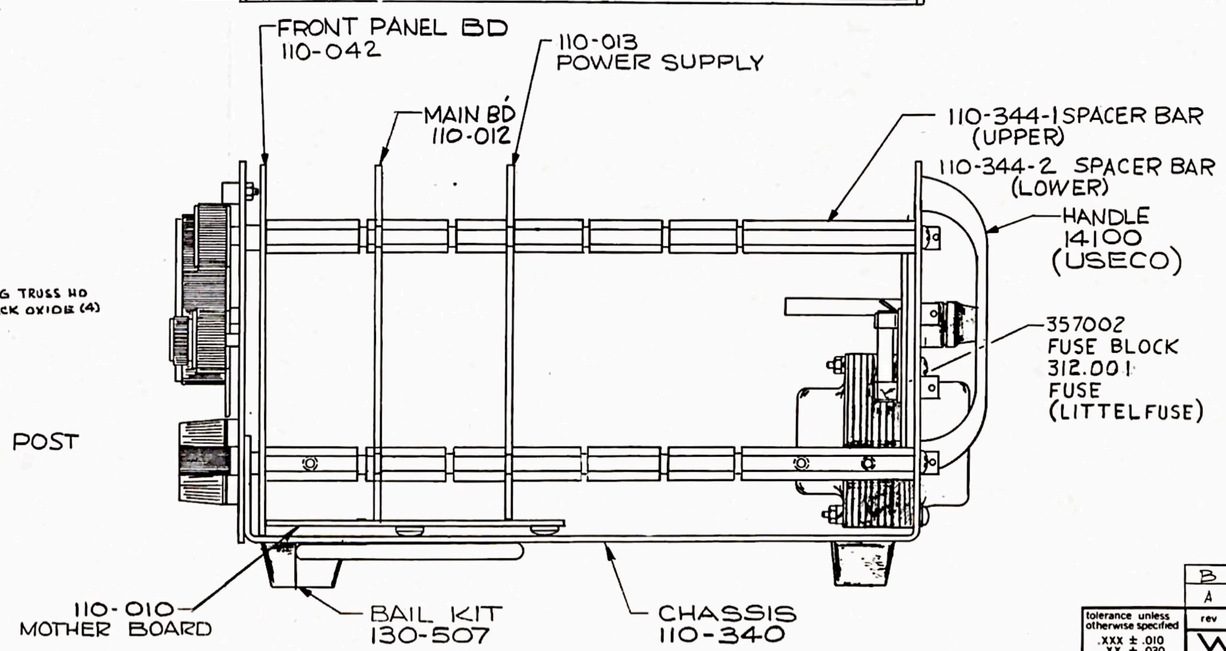

1. THE BATTERY MODEL (110B) REQUIRES THE FOLLOWING CHANGES:

1.1 REMOVE 110-013 P.S. ASSY, ADD 112-022 BATTERY REGULATOR ASSY.
1.2 ADD 112-023 BATTERY PACK ASSY.
1.3 REMOVE 110-500 TRANSFORMER, ADD 112-500 TRANSFORMER.

1.5 REMOVE 110-341-1 FRONT PANEL, ADD 110-341-2 FRONT PANEL.
1.6 REMOVE 110-010 MOTHER BD ASSY, ADD 110-039 MOTHER BD. ASSY

NOTES: UNLESS OTHERWISE SPECIFIED

rev	ecn	by	date	app.
B	ECN 1200	Po	1-30-75	
A	ECN 820	Eddy	1-9-74	SP

tolerance unless otherwise specified
.XXX ± .010
.XX ± .030

scale 1/1

material —"—

finish —"—

WAVETEK san diego, calif

by M Bachhra | date | app

title CHASSIS ASSY

model no. 110 | dwg no. SHEET 1 OF 2 D110-041 | rev B

this document contains proprietary information and design rights belonging to WAVETEK and may not be used or reproduced for any reason except calibration, operation and maintenance without written authorization.

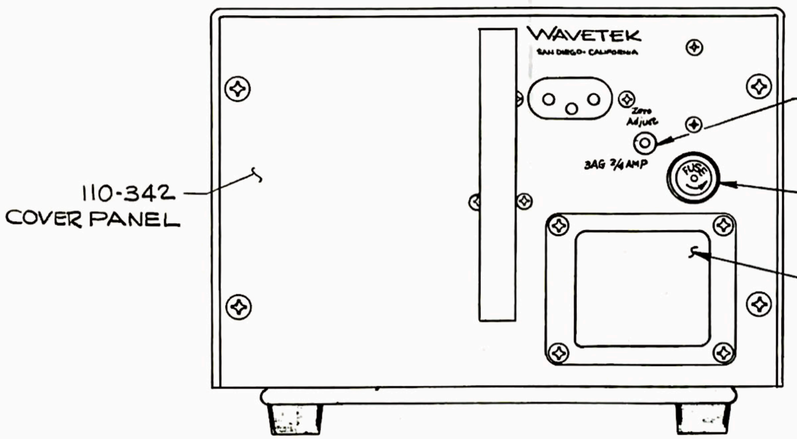

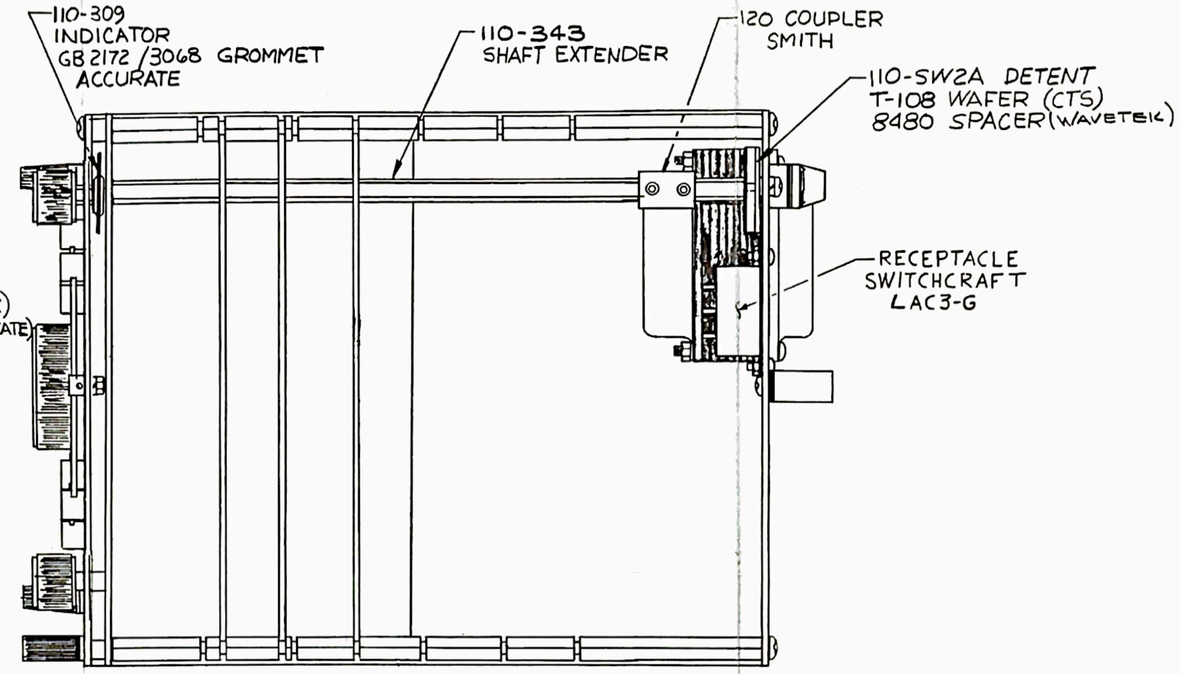

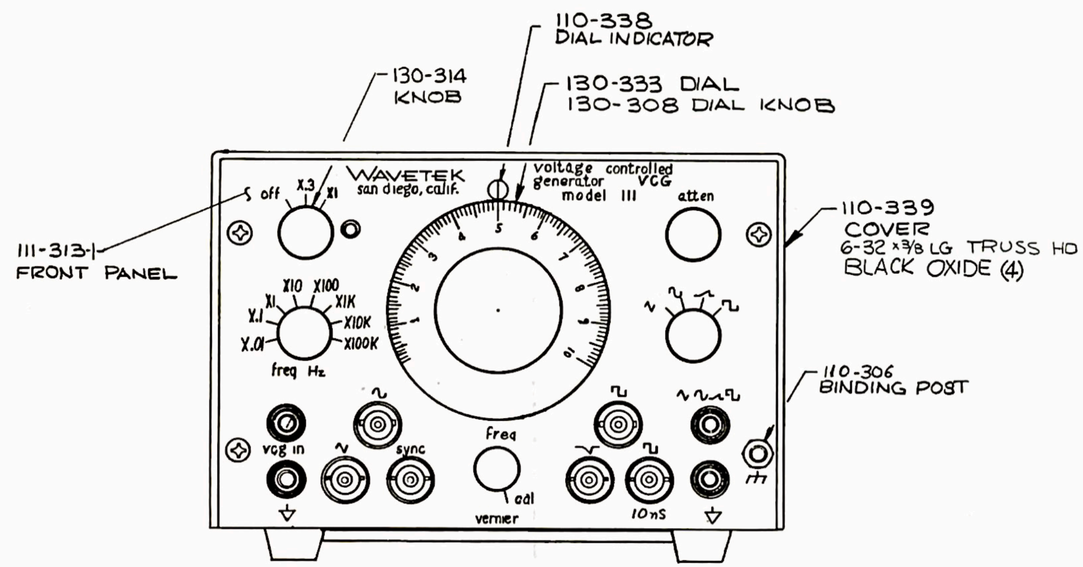

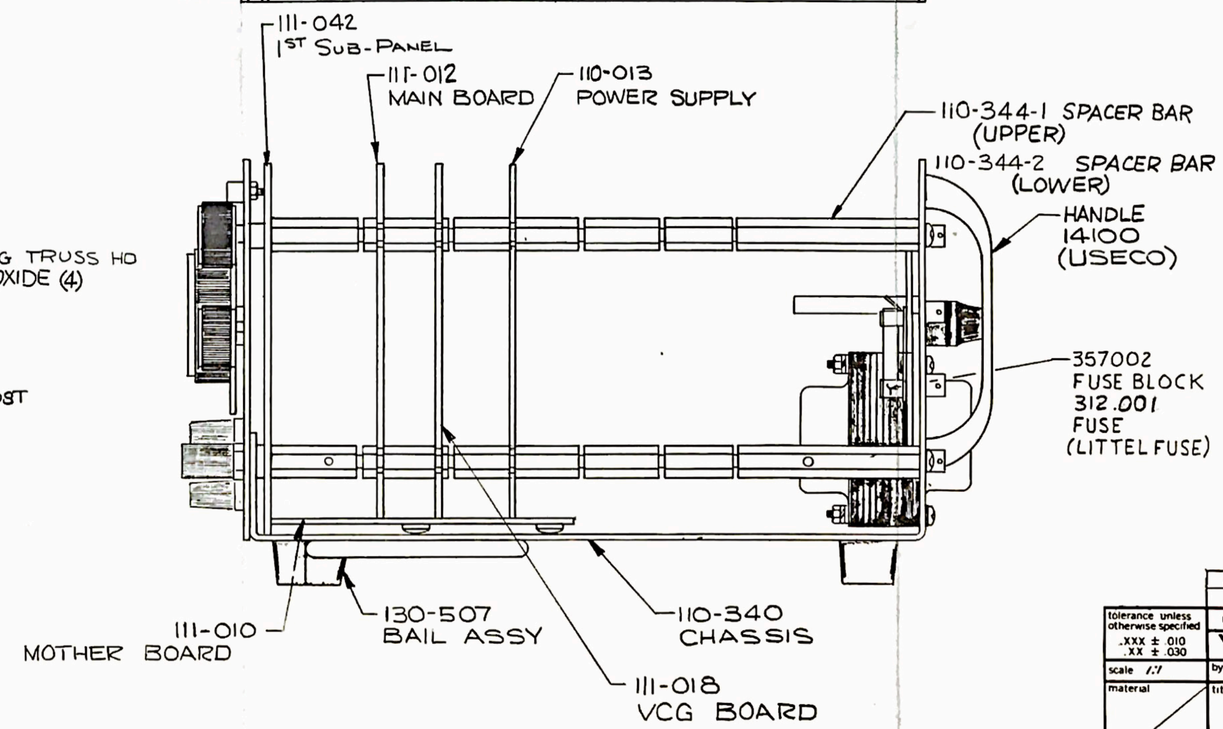

1. THE BATTERY MODEL (111B) REQUIRES THE FOLLOWING CHANGES:

1.1 REMOVE 110-013 P.S. ASSY, ADD 112-022 BATTERY REGULATOR ASSY.
1.2 ADD 112-023 BATTERY PACK ASSY.
1.3 REMOVE 110-500 TRANSFORMER, ADD 112-500 TRANSFORMER.

1.5 REMOVE 111-313-1 FRONT PANEL, ADD 111-313-2.
1.6 REMOVE 111-010 MOTHER BD, ADD 110-039 MOTHER BOARD.

NOTES: UNLESS OTHERWISE SPECIFIED.

rev	ecn	by	date	app.
B	ECN 1200	RW	1-30-75	
A	ECN 820	[illegible]	[illegible]	

tolerance unless otherwise specified
.XXX ± .010
.XX ± .030

WAVETEK san diego, calif

scale 1:1 | by M.E. Bar | date 6-5-72 | app. [illegible]

material

finish

title: CHASSIS ASSY

model no. 111 | dwg no. SHEET 1 of 2 D111-041 | rev B

this document contains proprietary information and design rights belonging to WAVETEK and may not be used or reproduced for any reason except calibration, operation and maintenance without written authorization.

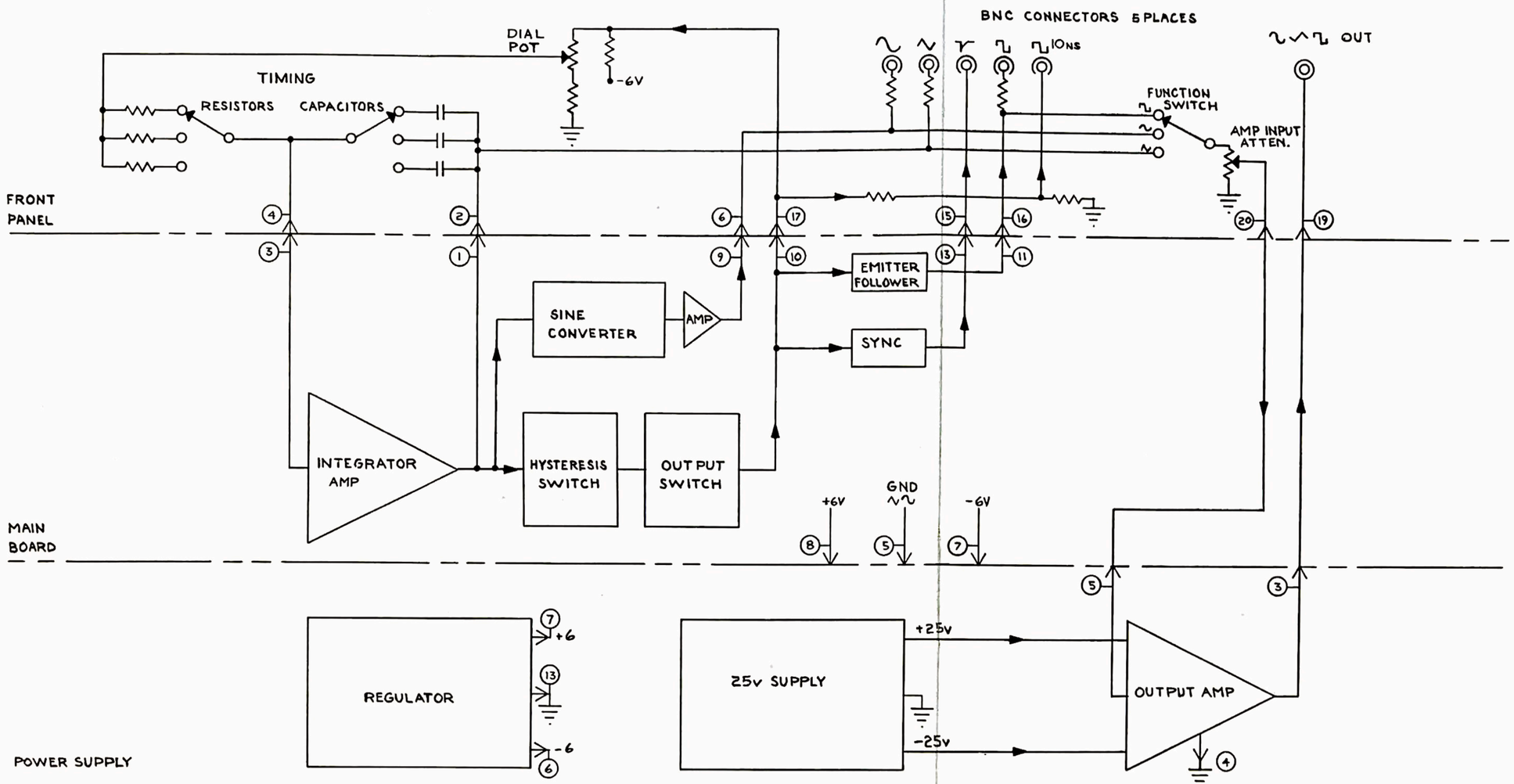

SIGNAL GND

NOTE:
NUMBERED CONNECTIONS ARE FROM NUMBER OF PIN ON BOARD INDICATED TO MOTHER BOARD

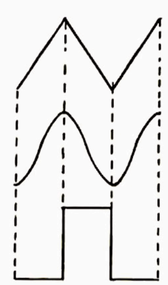

FUNCTION PHASE RELATIONSHIPS

BLOCK DIAGRAM
MODEL 110
DEC 30, 1965
DRN - R.A.M.
APPD - RM

NO.
C110-602

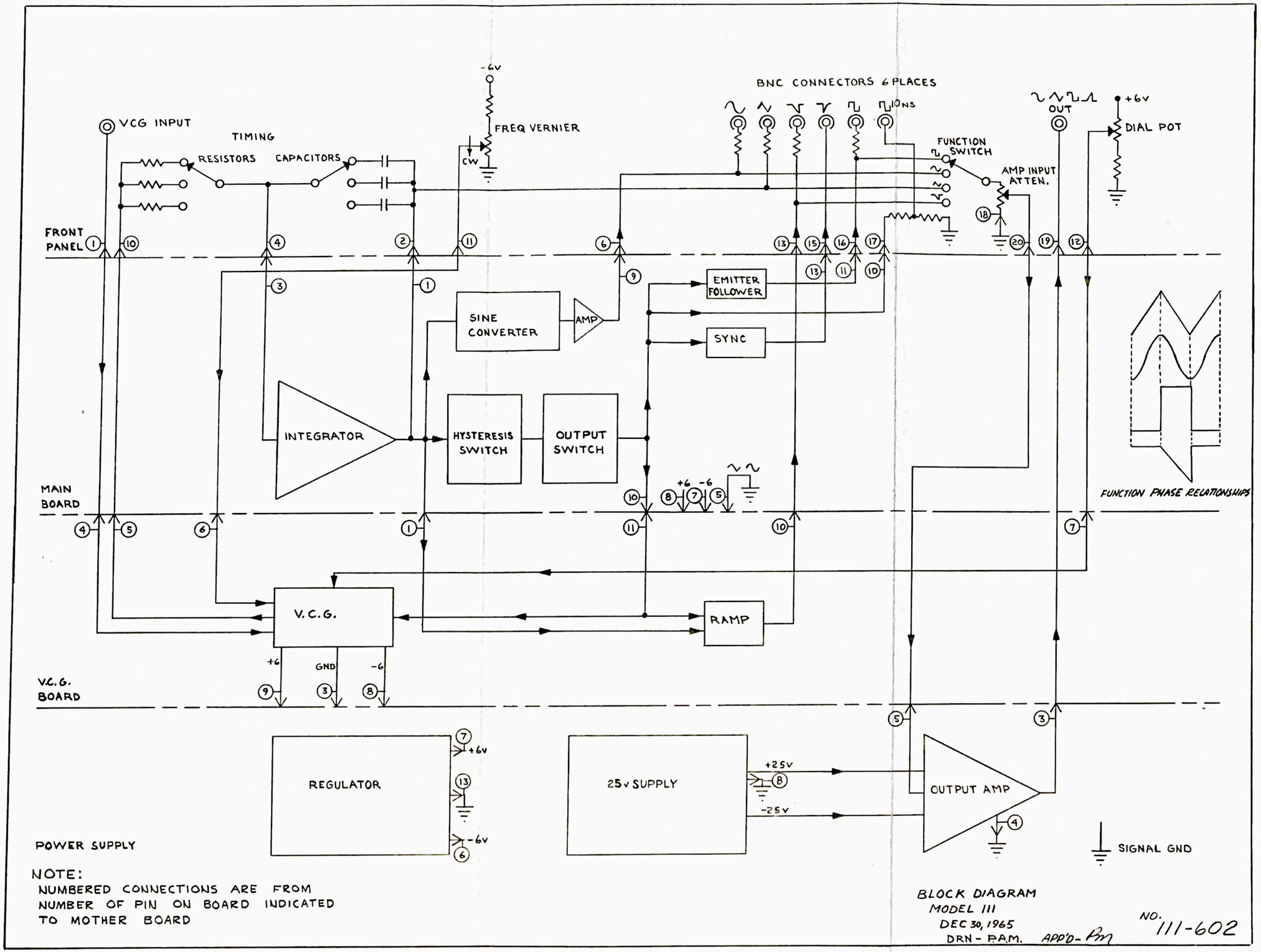

NOTE:
NUMBERED CONNECTIONS ARE FROM NUMBER OF PIN ON BOARD INDICATED TO MOTHER BOARD

BLOCK DIAGRAM
MODEL III
DEC 30, 1965
DRN - P.A.M. APP'D - PM

NO. 111-602

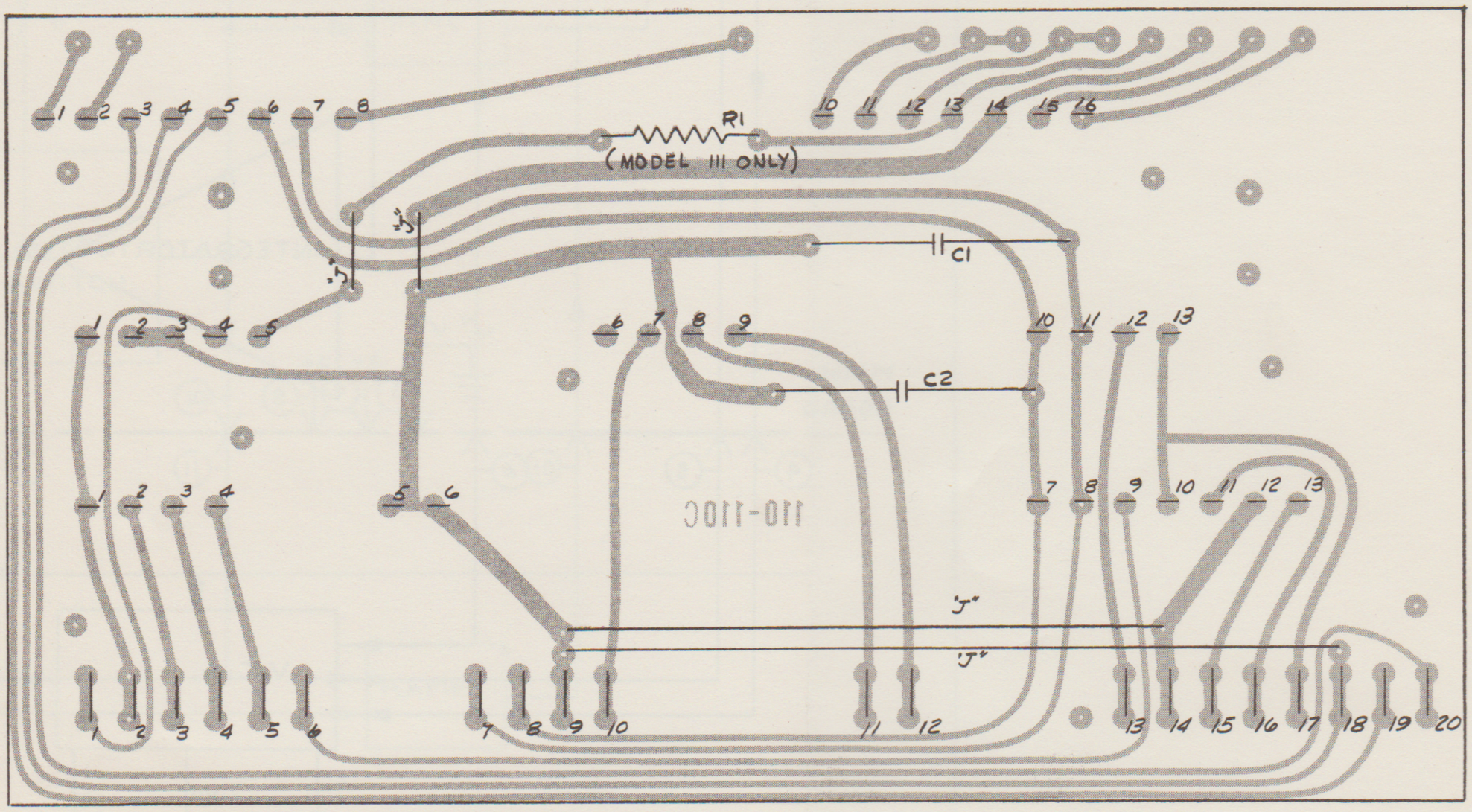

Mother Board Assembly (111-010)

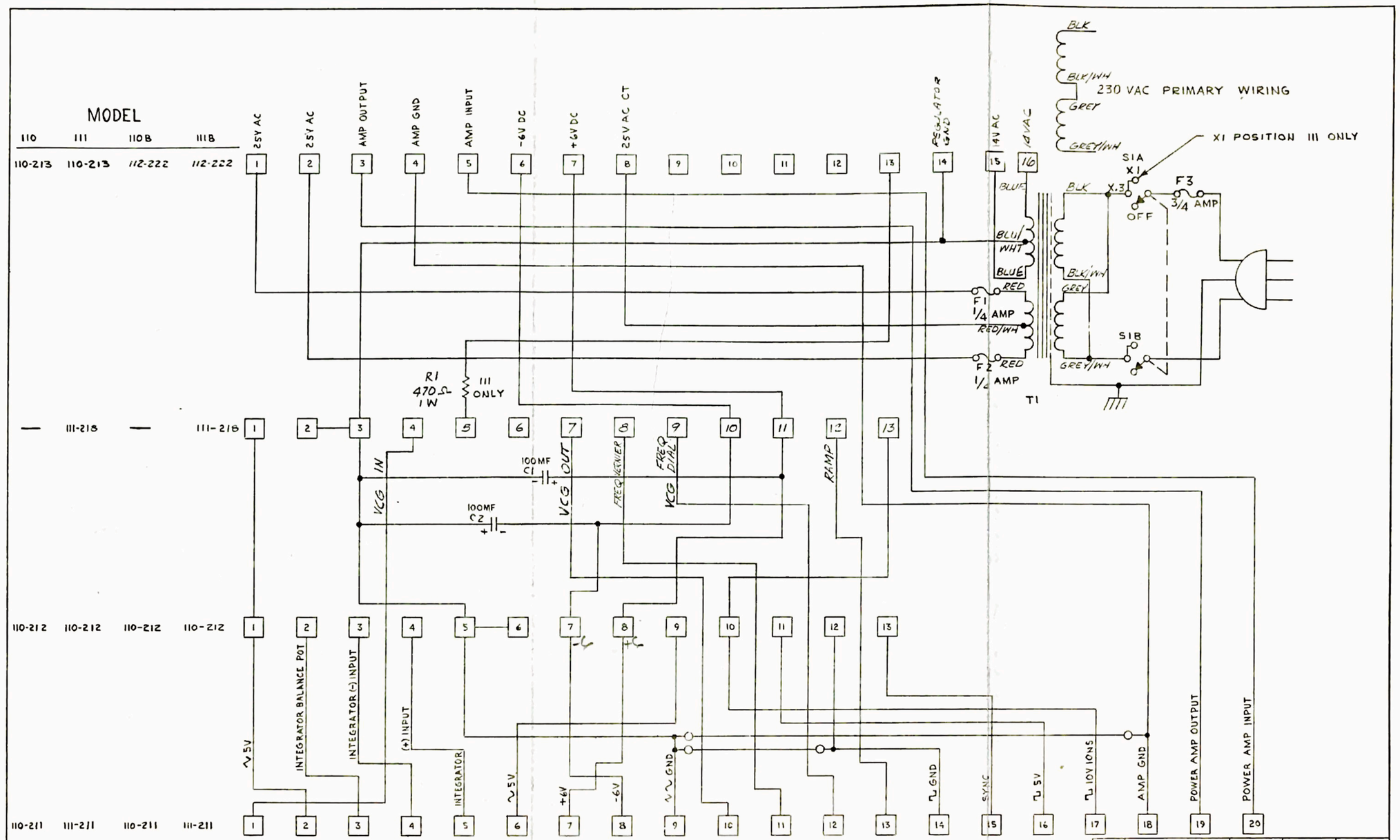

NOTE

1. PINS ARE NUMBERED FROM LEFT TO RIGHT AS VIEWED FROM COMPONENT SIDE OF CIRCUIT BOARD.

CHG	ECN NO	BY	DATE	APP
B	ECN # 146	MEB	6-21-67	T.O.
A	ECN #94 (WAS DWG # 110-200B)	JW	12-12-66	T.O.

WAVETEK SAN DIEGO, CALIF

DRN PA Marsh DATE 1-20-66 APP P. MacLin

MOTHER BOARD

MODEL 110 - 111 NO. C110-210D

D	REVISED	M.T.	2/1/67	T.O.
C	ECN 112	M.T.	F 8/1	T.O.

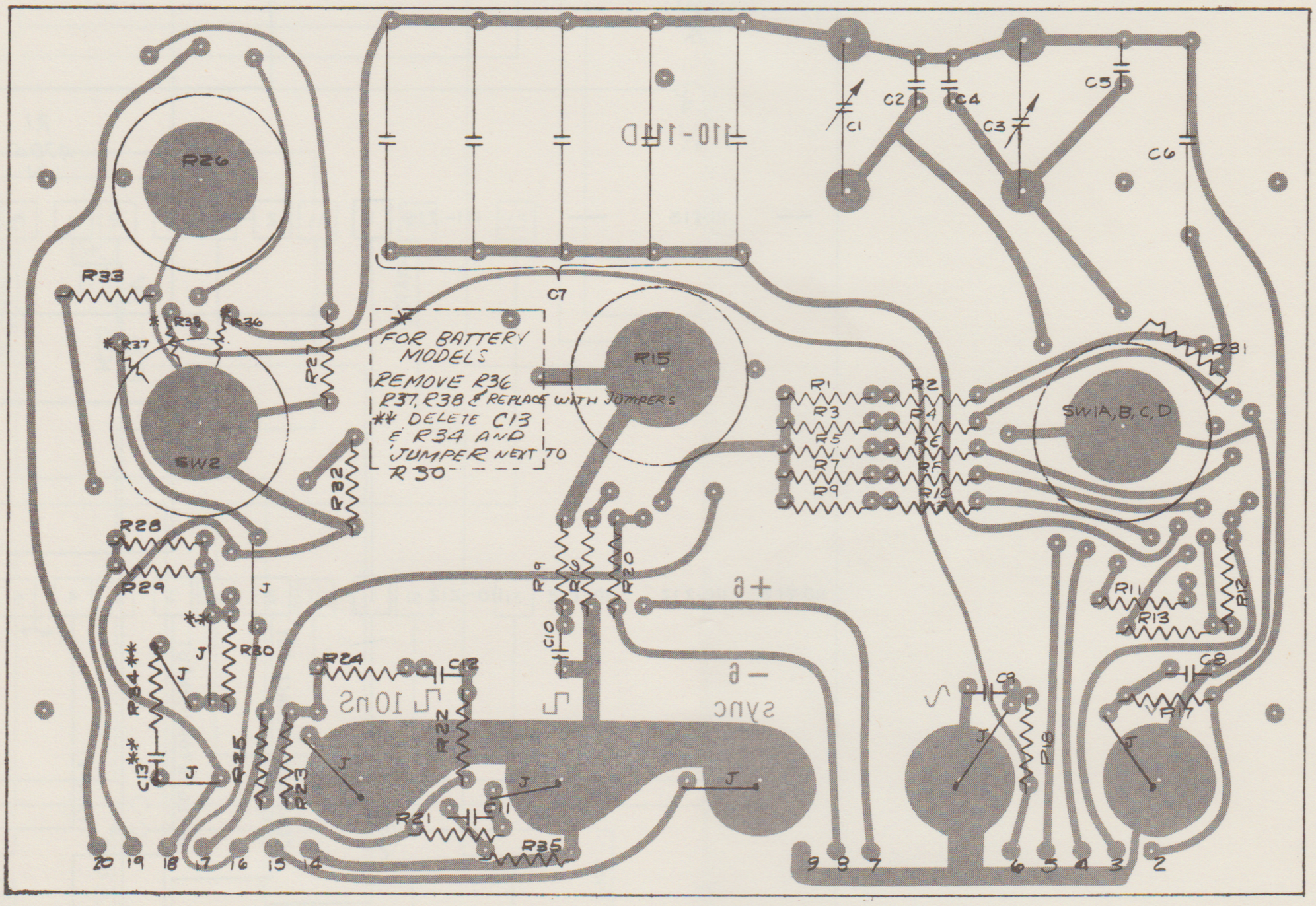

Front Panel Assembly

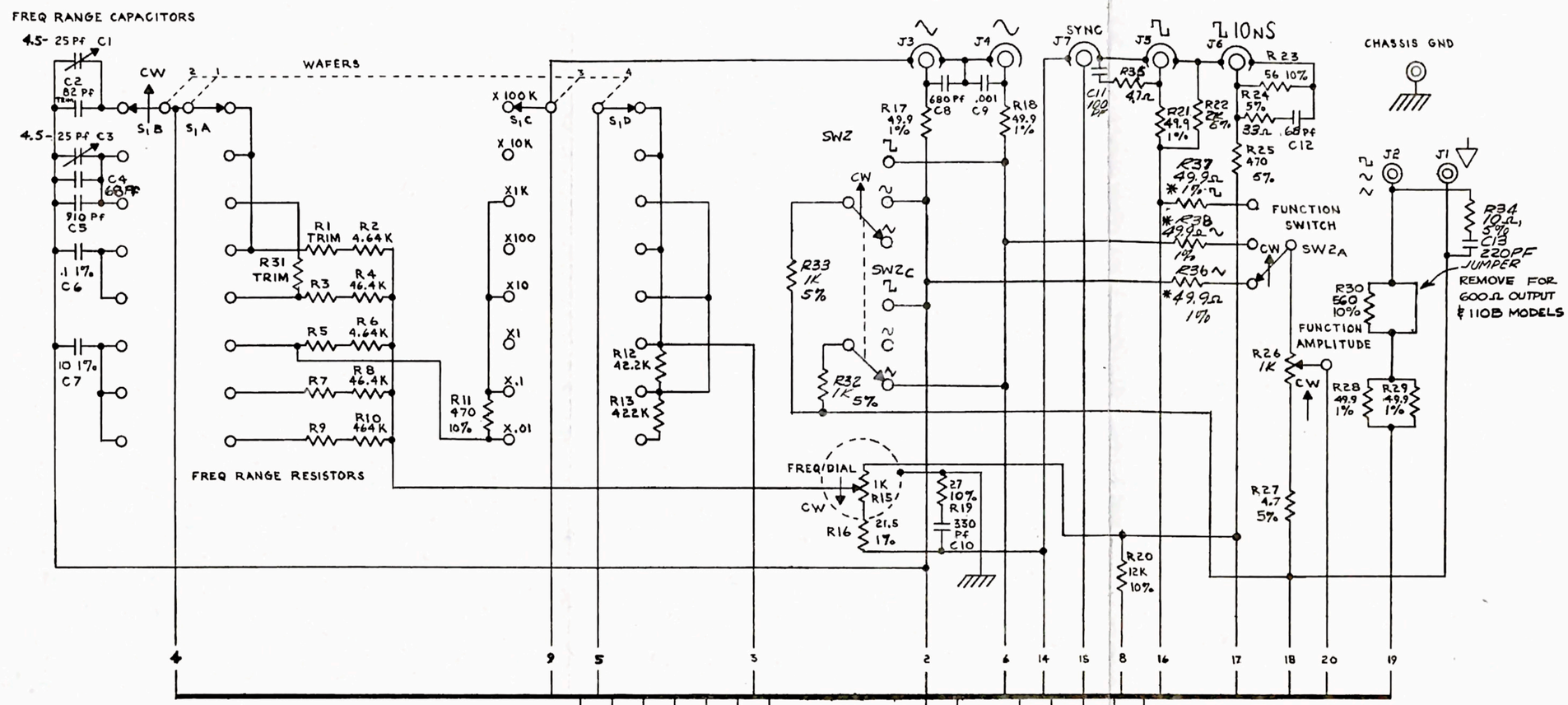

NOTE

UNLESS OTHERWISE SPECIFIED:

1. ALL RESISTORS 1% ¼W
2. RESISTANCE IN OHMS
3. CAPACITANCE IN MICROFARADS, ±10%
4. PINS ARE NUMBERED FROM RIGHT TO LEFT AS VIEWED FROM COMPONENT SIDE OF CIRCUIT BOARD
5. LABLED PINS ONLY, ACTUALLY APPEAR ON CIRCUIT BOARD

6* REMOVE FOR BATTERY MODELS ONLY AND ADD JUMPER

7. C13, R34 NOT INSTALLED ON 600Ω OUT AND BATTERY MODELS

J	ECN 533		12-15-72	
H	ECN #240	ENH	4/30/68	T.O.
G	ECN 231		4/16/68	T.O.
F	ECN #221	ENH	3-5-68	T.O.
E	ECN #205	MB	12/29/67	T.O.
D	ECN #185	ENH	11-13-67	TO
C	ECN #173	ENH	9-21-67	T.O.
B	ECN 157	MB	7/20/67	T.O.
A	ECN #94 (HAS DWG # 110-201C)			12-9-66

WAVETEK SAN DIEGO, CALIF

DRN PA Marsh DATE 1-19-66 APP: P. Mackie

FRONT PANEL

MODEL 110, 110B NO C110-211 J

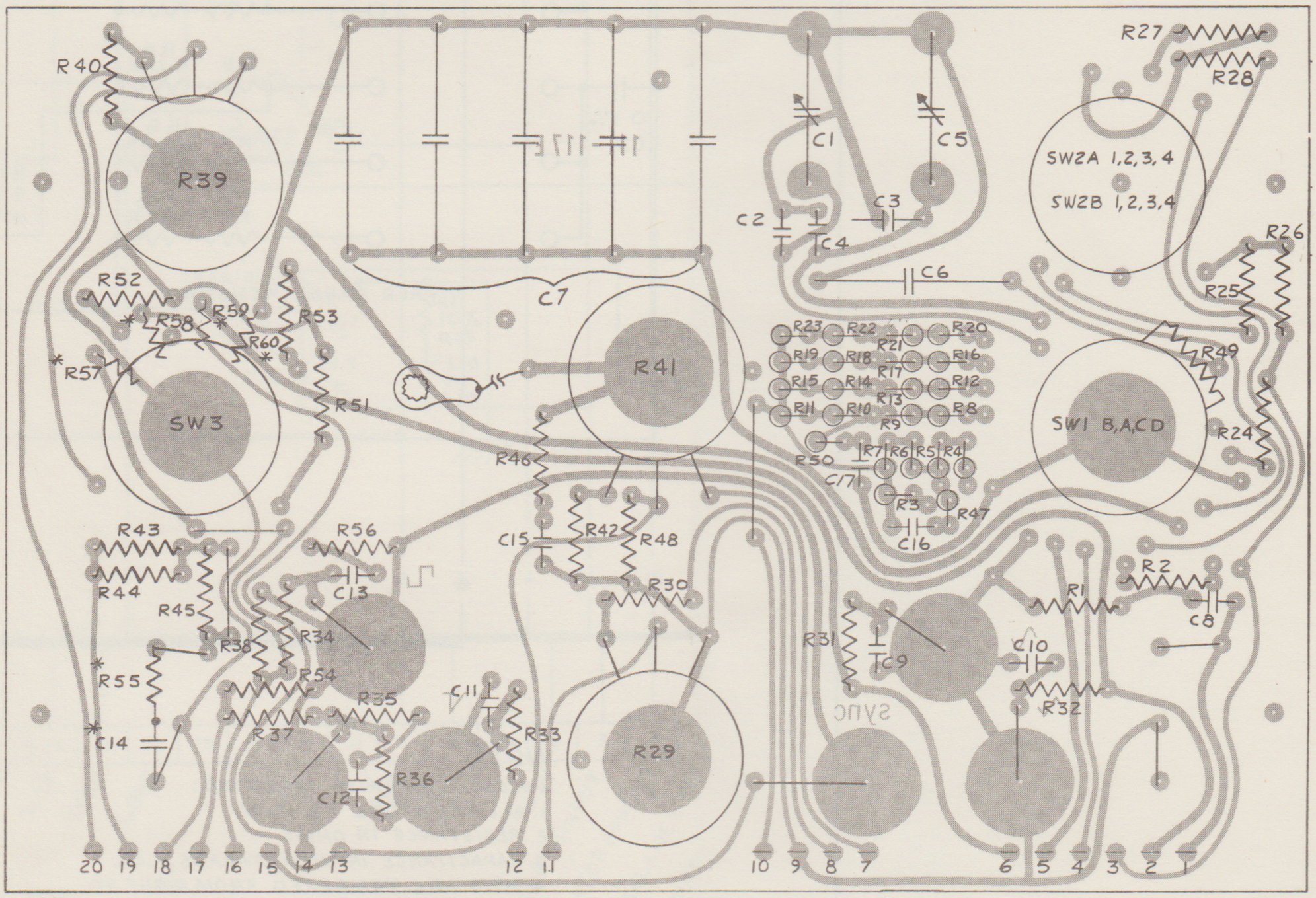

Front Panel Assembly

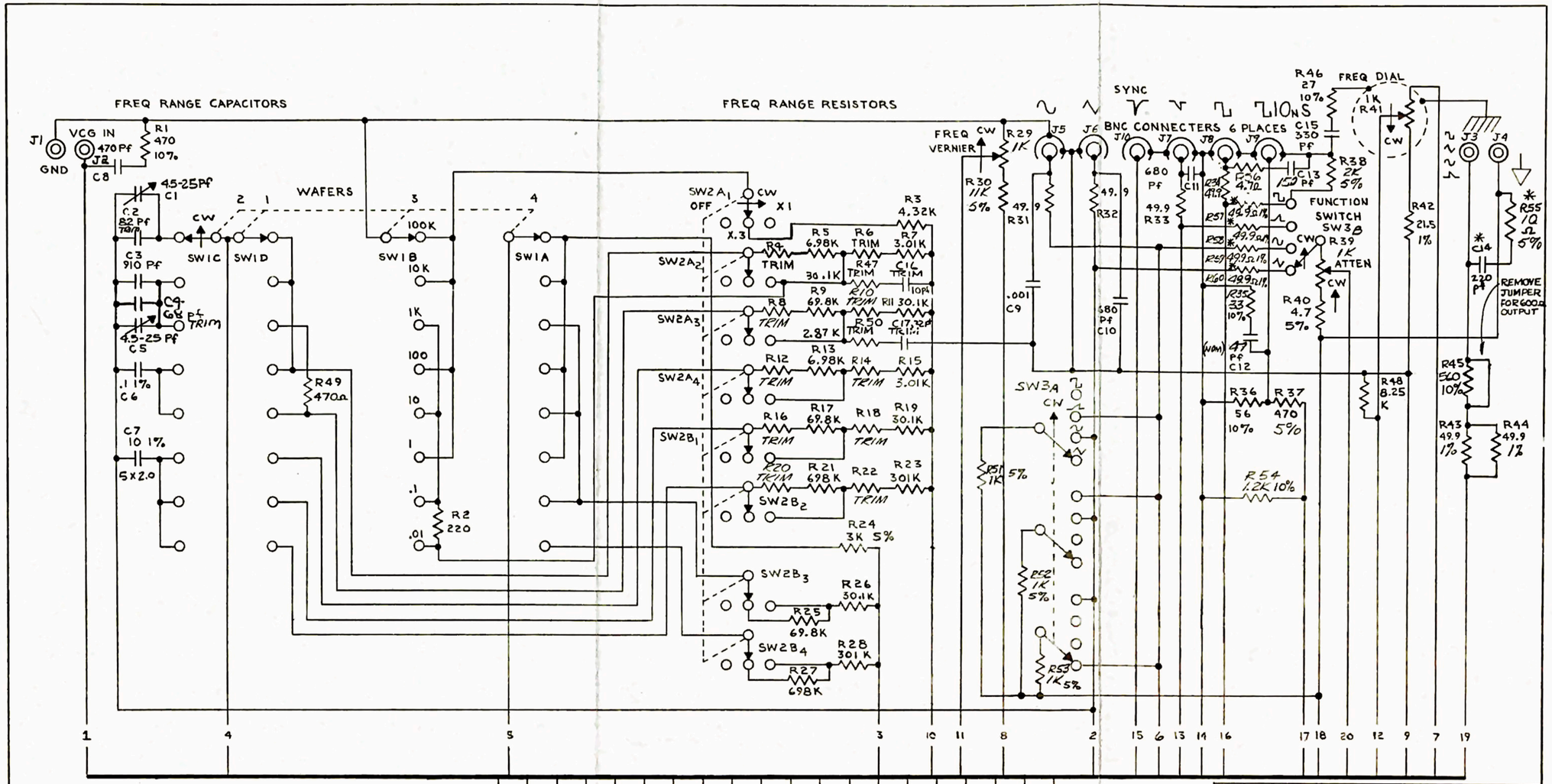

NOTE

UNLESS OTHERWISE SPECIFIED:

1. ALL RESISTORS 1% ¼W
2. RESISTANCE IN OHMS
3. CAPACITANCE IN MICROFARADS, ±10%.
4. PINS ARE NUMBERED FROM RIGHT TO LEFT AS VIEWED FROM COMPONENT SIDE OF CIRCUIT BOARD
5. SELECT TRIM RESISTORS FOR ACCURATE FREQUENCY RANGING

6. REMOVE RESISTOR FOR BATTERY MODEL ONLY ADD JUMPER
7. C14, R55 NOT INSTALLED FOR 600Ω OUT AND BATTERY MODELS

K	1130	BA	11-5-74	
J	ECN 535		12-13-72	3
H	ECN #248	ENH	T.O.	6/19/68
G	ECN #231		T.O	4/10/68
F	ECN #222	ENH	T.O.	3-5-68
E	ECN #205	MB	T.O.	1/2/68
D	ECN #185	ENH	T.O	11-13-67
C	ECN #113	ENH	T.O.	9-21-67
B	ECN #157	MB	T.O.	7/2/67
A	ECN #94 (WAS DWG # 110-201)			12-12-66
L	ECN 1206		2-4-75	

WAVETEK SAN DIEGO, CALIF

DRN PA Marsh DATE 1-18-66 APP

FRONT PANEL

MODEL 111, 111B NO C111-217 L

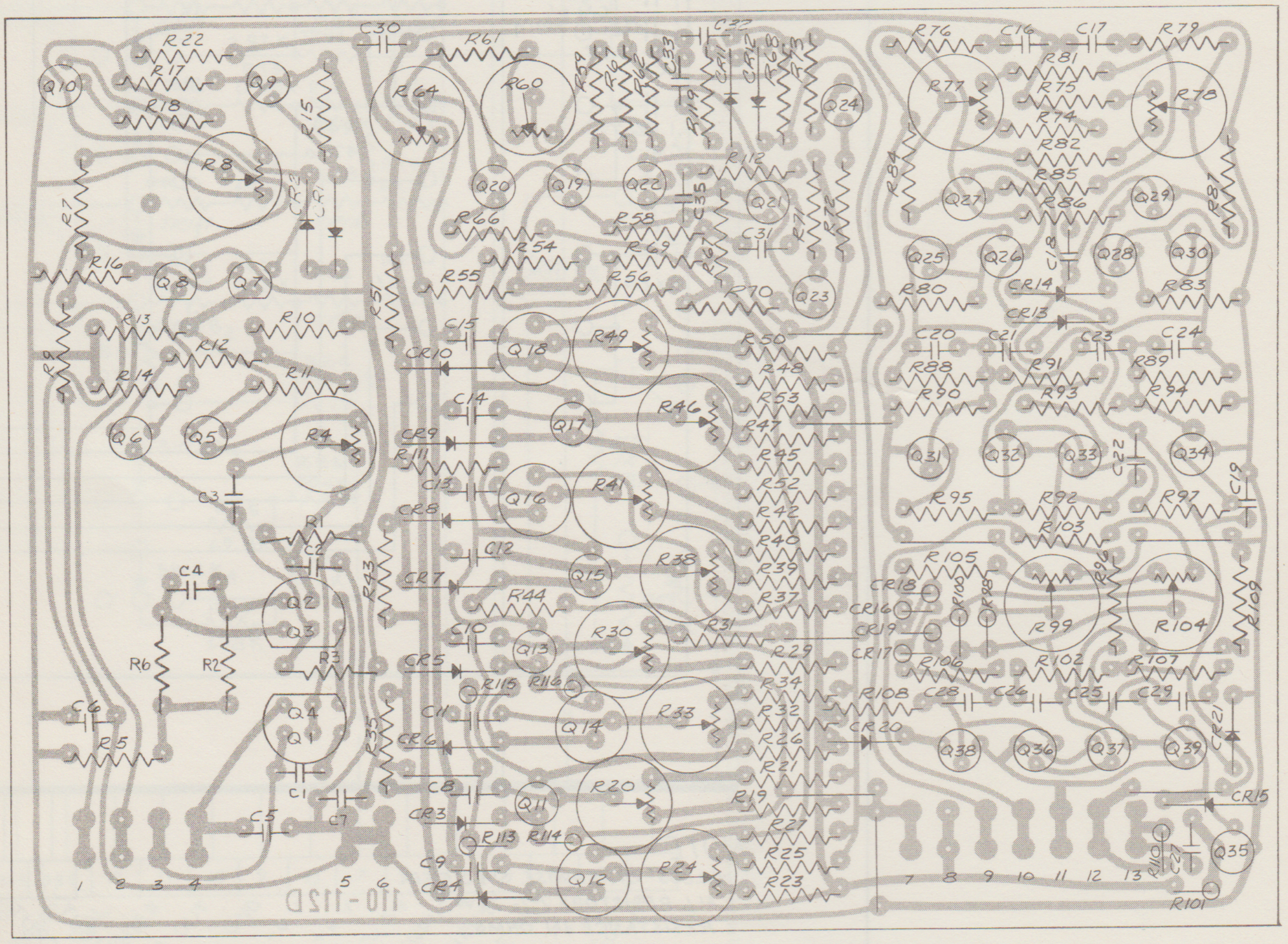

Main Board Assembly (110-012)

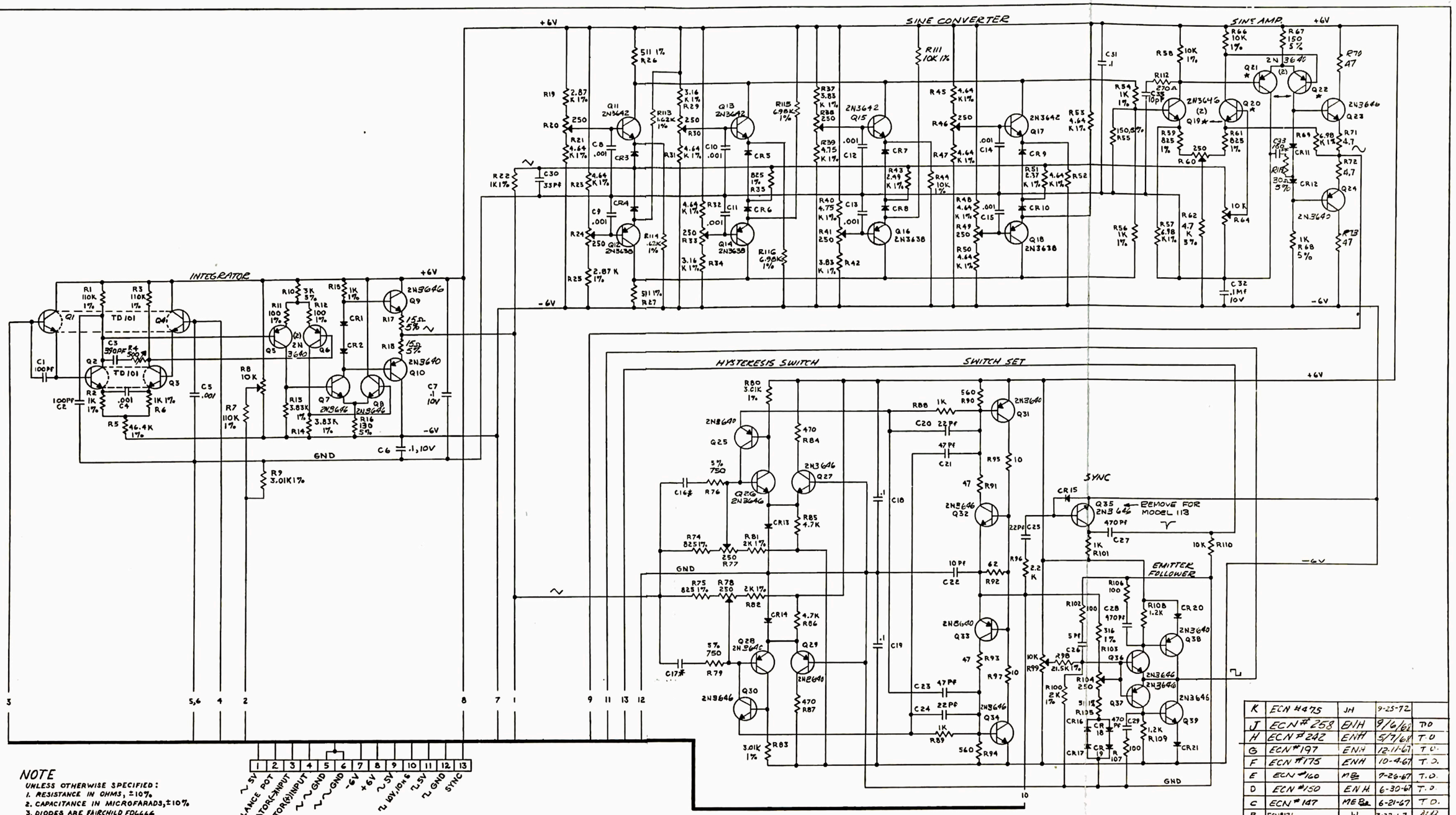

NOTE

UNLESS OTHERWISE SPECIFIED:

1. RESISTANCE IN OHMS, ±10%
2. CAPACITANCE IN MICROFARADS, ±10%
3. DIODES ARE FAIRCHILD FD6666
4. PINS ARE NUMBERED FROM LEFT TO RIGHT AS VIEWED FROM COMPONENT SIDE OF CIRCUIT BOARD
5. * MATCHED PAIR – MATCHED FOR β AND V_{BE}
6. ALL DIFFERENTIAL PAIRS MATCHED FOR 10% β MATCH
7. GMV; GUARANTEED MINIMUM VALUE
8. Δ INDICATES THERMALLY CONNECTED PAIRS
9. # FOR MODEL 110 USE 220 PF; MODEL 113 USE 150 PF, ALL OTHERS USE 100 PF.

CHG	ECN NO	BY	DATE	APP
K	ECN #475	JH	9-25-72	
J	ECN # 258	ENH	9/6/68	T.O
H	ECN # 242	ENH	5/7/68	T.O
G	ECN # 197	ENH	12-11-67	T.O.
F	ECN # 175	ENH	10-4-67	T.O.
E	ECN # 160	MEB	7-26-67	T.O.
D	ECN # 150	ENH	6-30-67	T.O
C	ECN # 147	MEB	6-21-67	T.O.
B	ECN # 126	JW	3-27-67	AHP
A	ECN # 94 (TAS CHALLE # 110-202)	JW	12-12-66	T.O

WAVETEK SAN DIEGO, CALIF

DRN PA Marsh DATE 1-14-66 APP P Mackie

MAINBOARD SCHEMATIC

MODEL 110, 110B, 111, 111B, 112, 112B, 115, 115B, 113 NO. D110-212 K

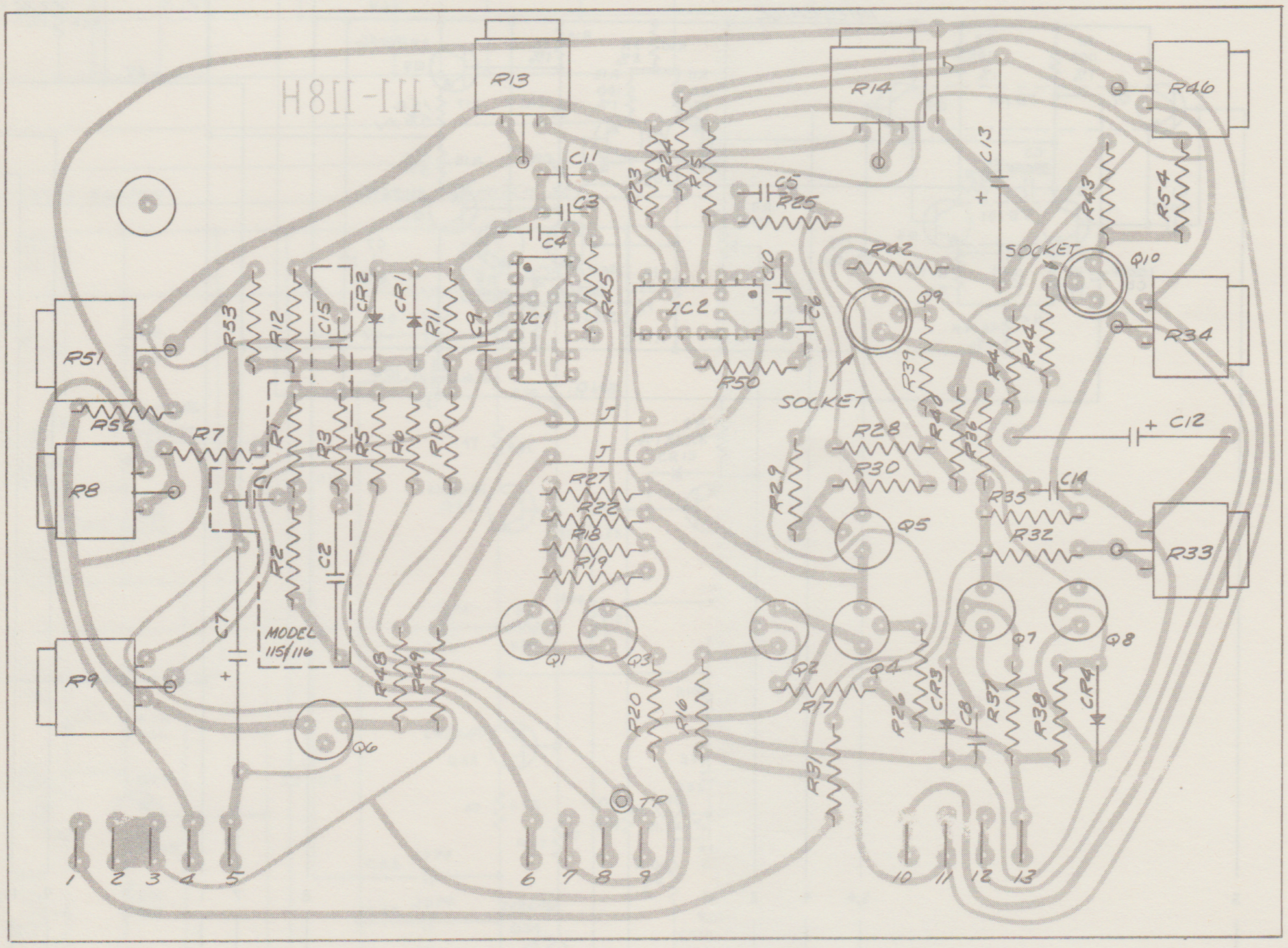

VCG Board Assembly (111-018)

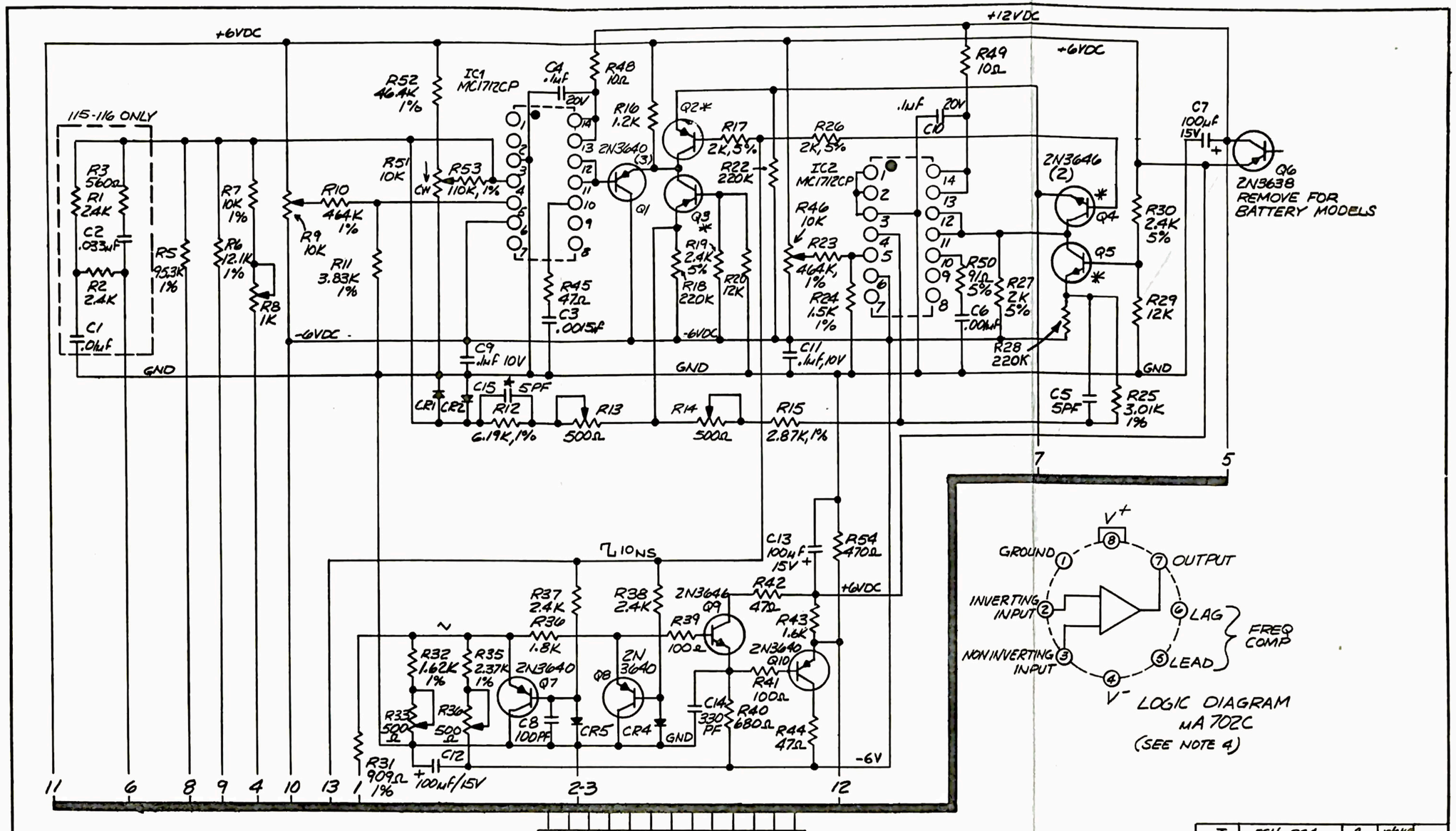

LOGIC DIAGRAM
μA 702C
(SEE NOTE 4)

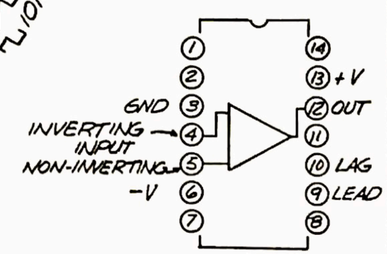

LOGIC DIAGRAM
MC1712CP

NOTES: UNLESS OTHERWISE SPECIFIED

1 DIODES ARE FD6666

2 * INDICATES MATCHED SPECIAL AS INVERTED SWITCHES

3 ✦ INDICATES FOR MODEL 115-116 CHANGE C15 FROM 5PF TO 100PF

4 μA702C MAY BE USED AS AN ALTERNATE FOR MC1712CP

rev	ecn	by	date	app.
T	ECN 284	[illegible]	[illegible]	T.O.
S	CORRECTED ERRORS	FGS	2/25/69	T.O.
R	REDRAWN	[illegible]	2/14/69	T.O.

tolerance unless otherwise specified: XXX ± .010, XX ± .030

WAVETEK san diego, calif

scale N/A | by BOCHICHIO | date 2-14-69 | app.

material N/A

title: VCG SCHEMATIC

model no. 111-116 | dwg no. C111-218 | rev T

finish N/A

this document contains proprietary information and design rights belonging to WAVETEK and may not be used or reproduced for any reason except calibration, operation and maintenance without written authorization.

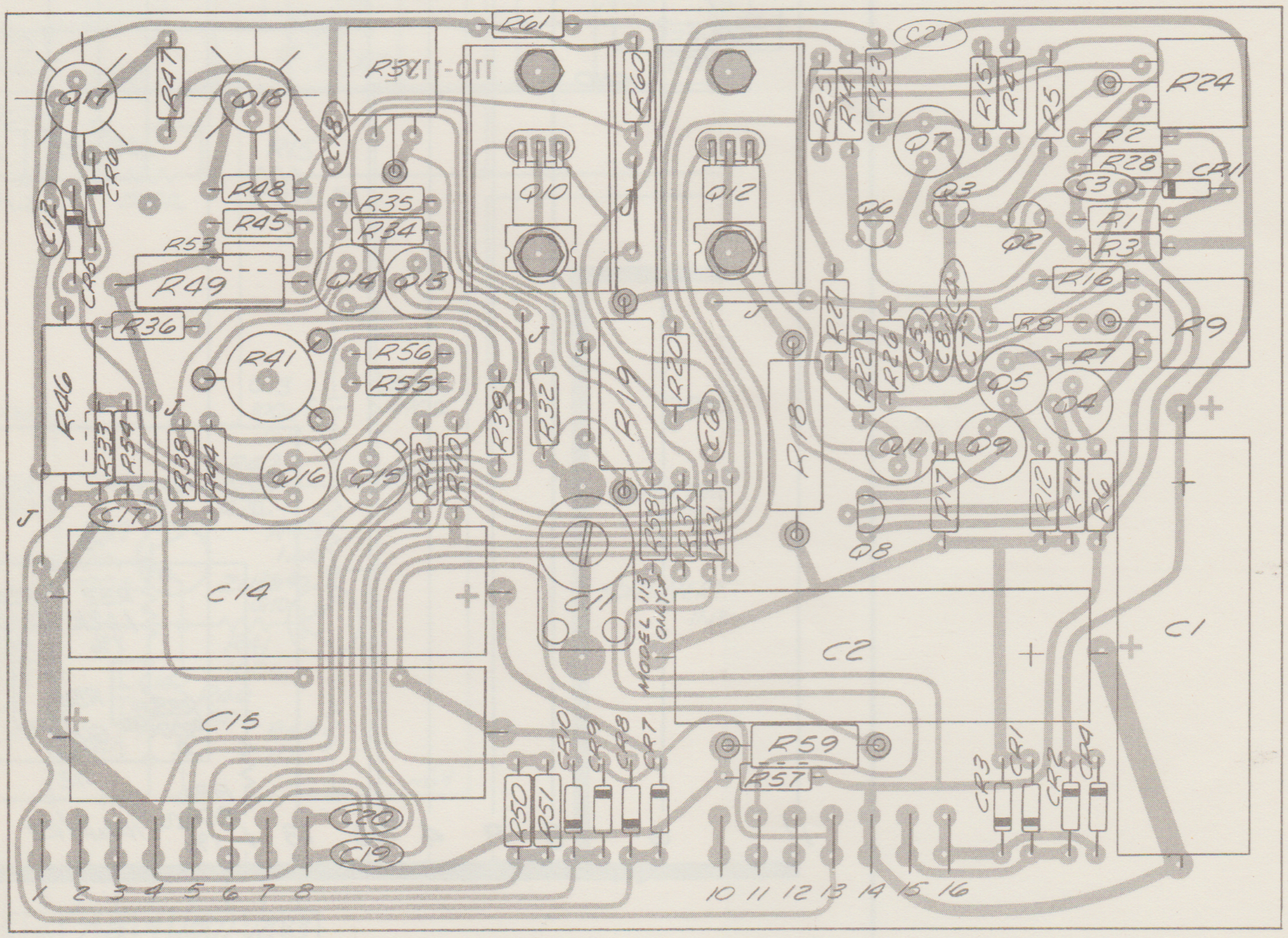

Power Supply and Output Amplifier Assembly (110-013)

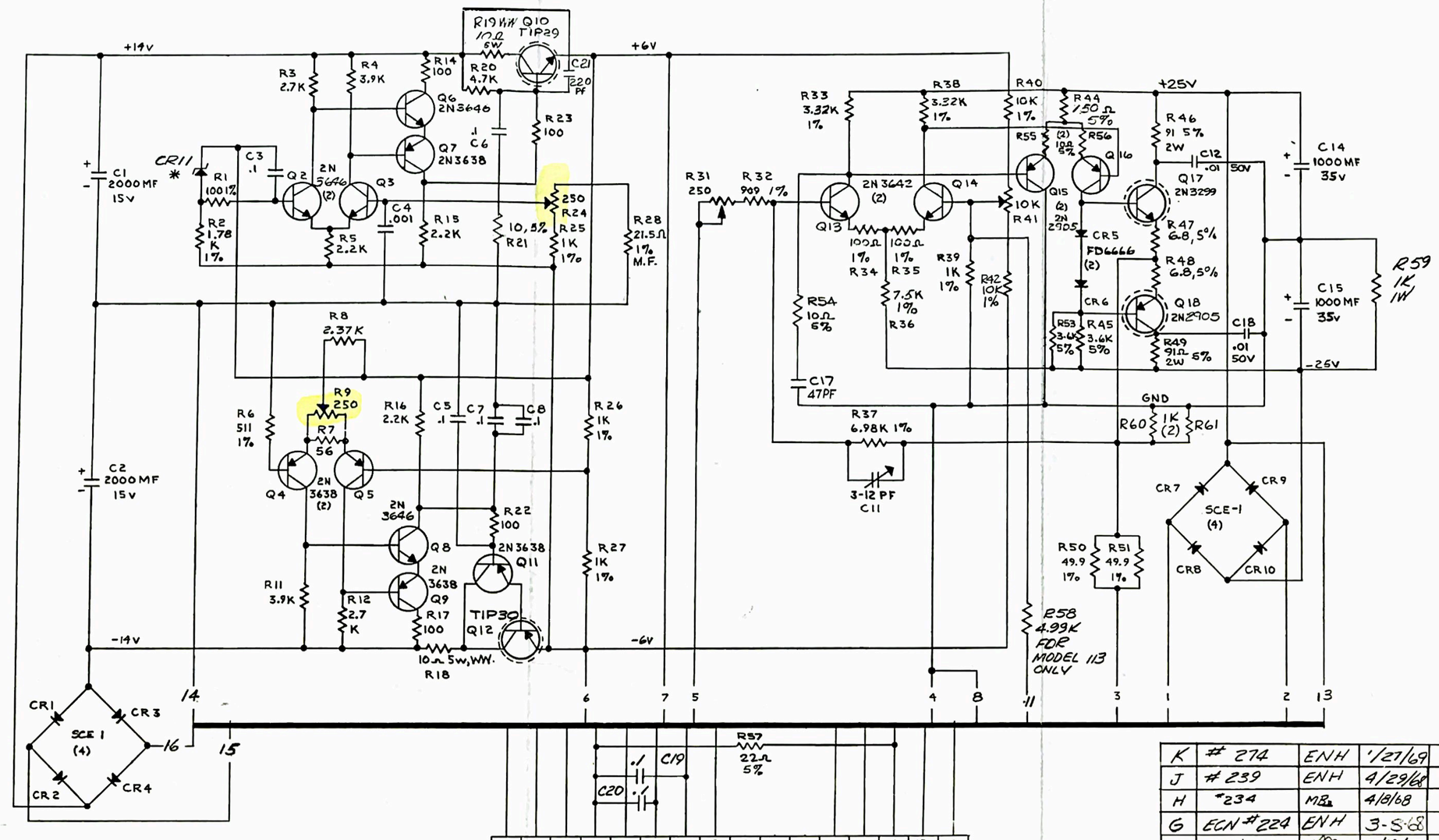

LEGEND :

HEAT SINKS

NOTE

UNLESS OTHERWISE SPECIFIED :

1. RESISTANCE IN OHMS, ±10%
2. CAPACITANCE IN MICROFARADS, ±10%, 10V
3. * ZENER SELECTED PER WAVETEK SPEC. 130-506
4. PINS ARE NUMBERED FROM LEFT TO RIGHT AS VIEWED FROM COMPONENT SIDE OF CIRCUIT BOARD
5. ALL DIFFERENTIAL PAIRS MATCHED FOR 10% β MATCH

LAST REF. DESIGNATORS USED

C 21
CR 10
Q 18
R 61

CHG	ECN NO.	BY	DATE	APP
R	ECN 1207	Bo	2-5-75	
Q	ECN 1124	Bo	11/25/74	
P	ECN 398	Bo	1/19/72	
N	ECN 339	TRQ	3/18/71	T.O
M	ECN 279	DHE	7/30/69	T.O
L	CORRECTED ERRORS	FGS	2/25/69	T.O

CHG	ECN NO.	BY	DATE	APP
K	# 274	ENH	1/27/69	T.O
J	# 239	ENH	4/29/68	T.O.
H	#234	MB	4/8/68	T.O.
G	ECN #224	ENH	3-5-68	T.O.
F	ECN #166	ADU	9/18/67	T.O
E	ECN 157 & 158	MB	7/20/67	T.O.
D	ECN #141	DHE	5-18-67	[illegible]
C	ECN #136	DHE	5-1-67	[illegible]
B	ECN # 131	JW	3-31-67	[illegible]
A	ECN # 94	JW	12-12-66	[illegible]

WAVETEK SAN DIEGO, CALIF

DRN PA Marsh DATE 1-21-66 APP P. Machin

POWER SUPPLY AND OUTPUT AMP

MODEL 110 THRU 116

NO. C110-213

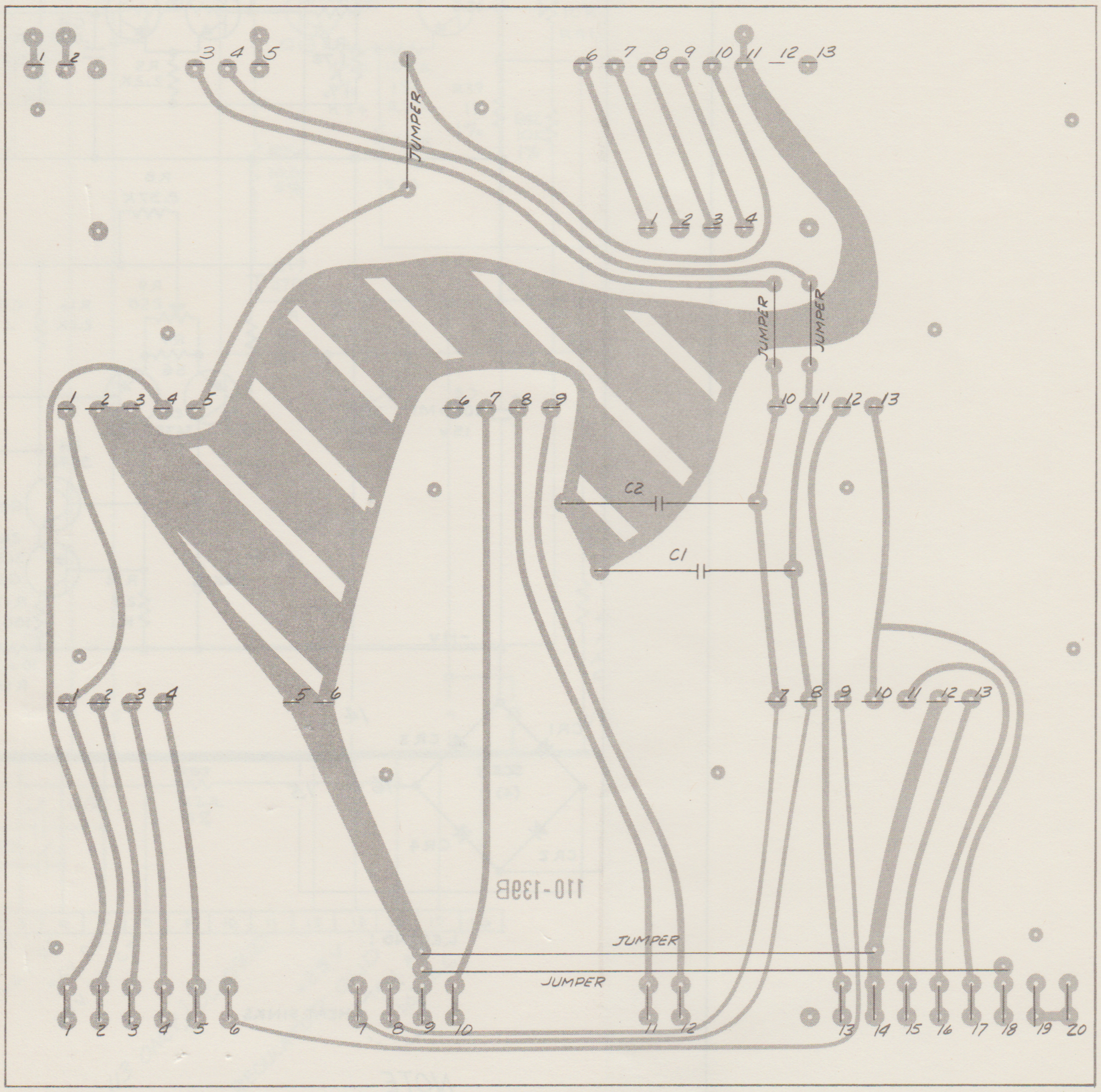

Mother Board Assembly (110-039) for Battery Model Only

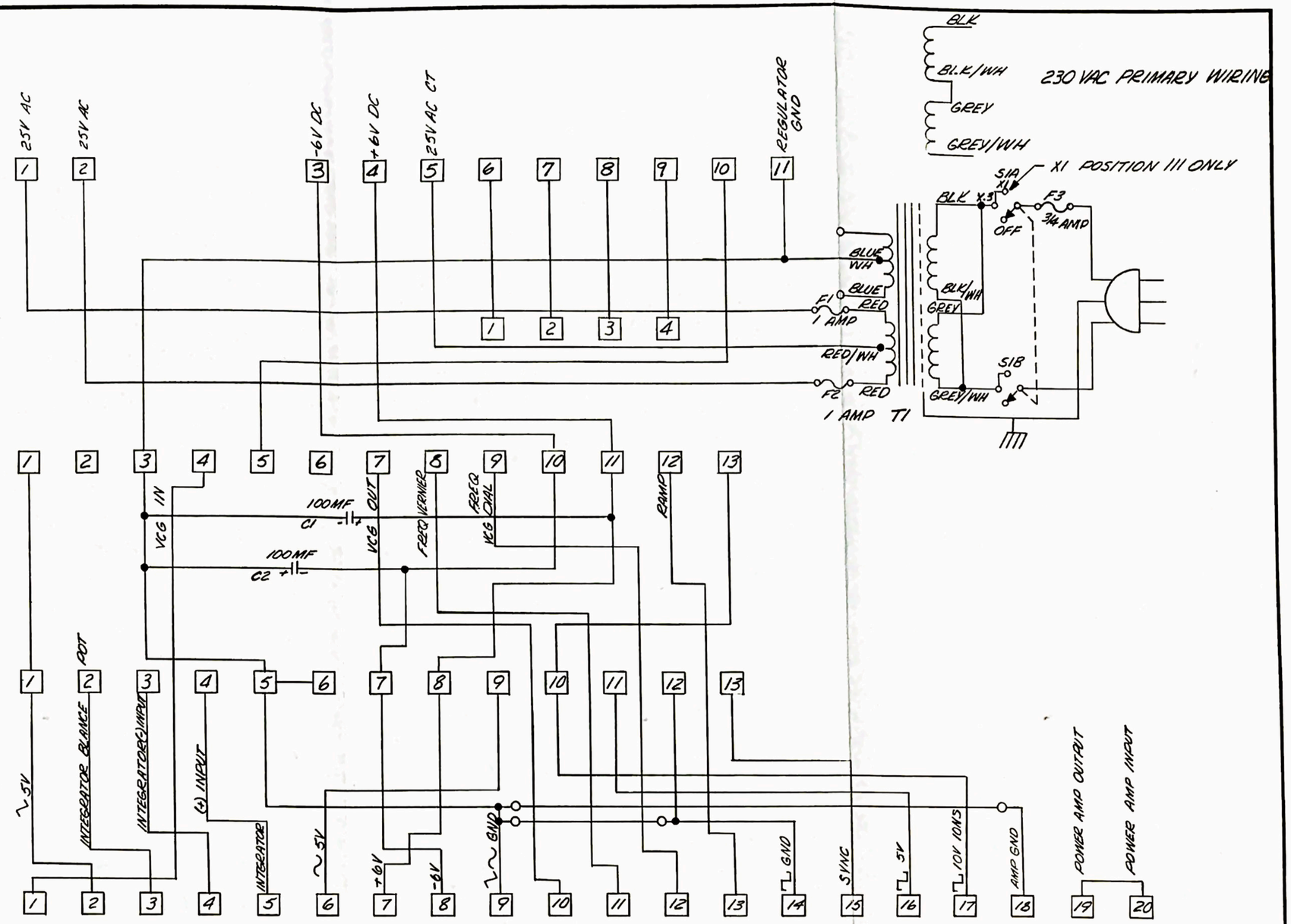

NOTES:

1. PINS ARE NUMBERED FROM LEFT TO RIGHT AS VIEWED FROM COMPONENT SIDE OF CIRCUIT BOARD

CHG	ECN NO.	BY	DATE	APP
B	PIN CORRECTION	MEB	1/22/67	T.O.
A	ECN #167	ENH	9-5-67	T.O.

tolerance unless otherwise specified .XXX ± .010 .XX ± .030	rev	ecn	by	date	app.
	WAVETEK san diego, calif				
scale	by ENH	date 8-14-67	app P. Mecke		
material	title MOTHER BOARD				
finish	model no. 110B, 111B	dwg no. C110-239	rev B		

this document contains proprietary information and design rights belonging to WAVETEK and may not be used or reproduced for any reason except calibration, operation and maintenance without written authorization.

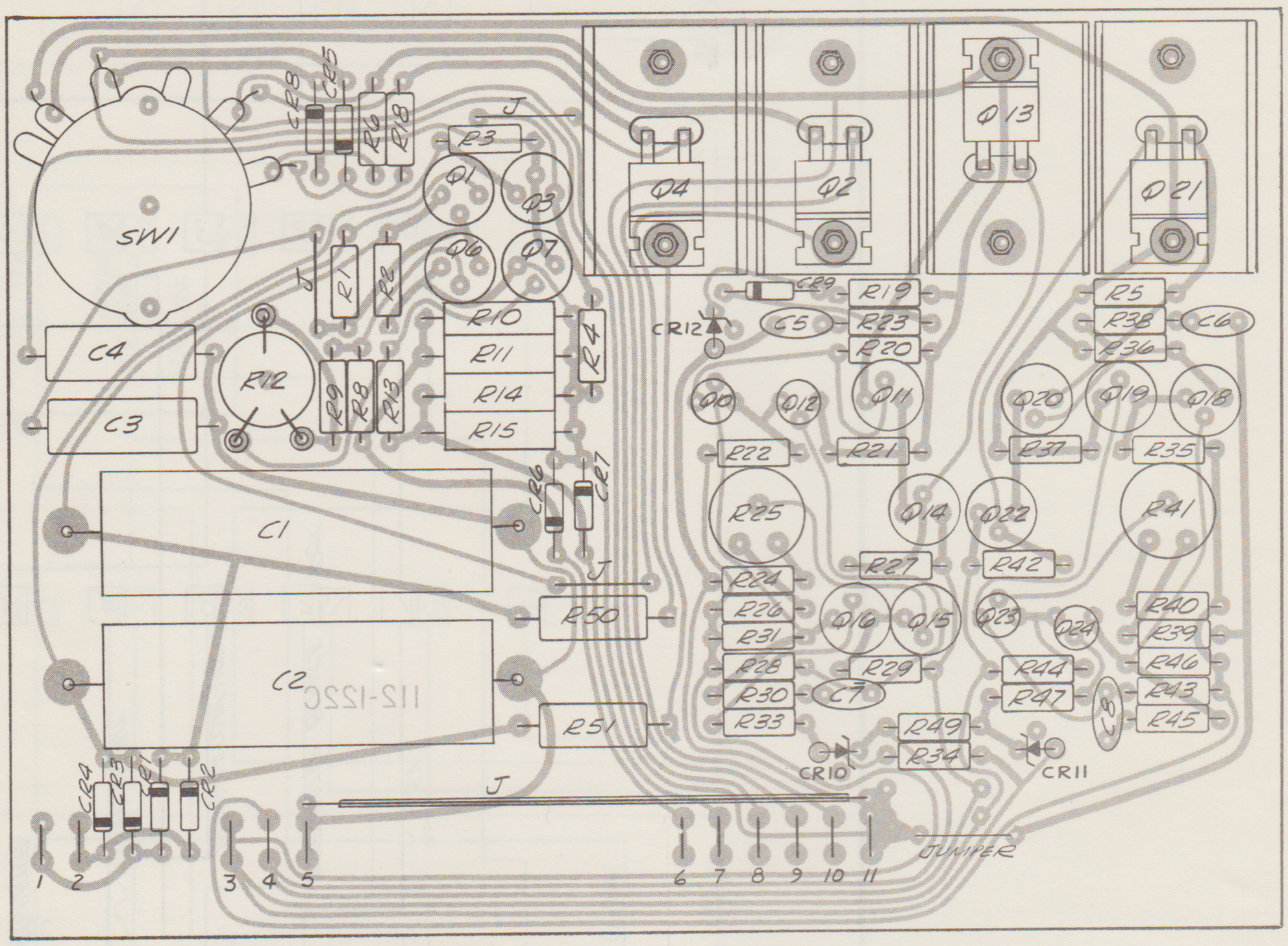

Battery Regulator Assembly (112-022)

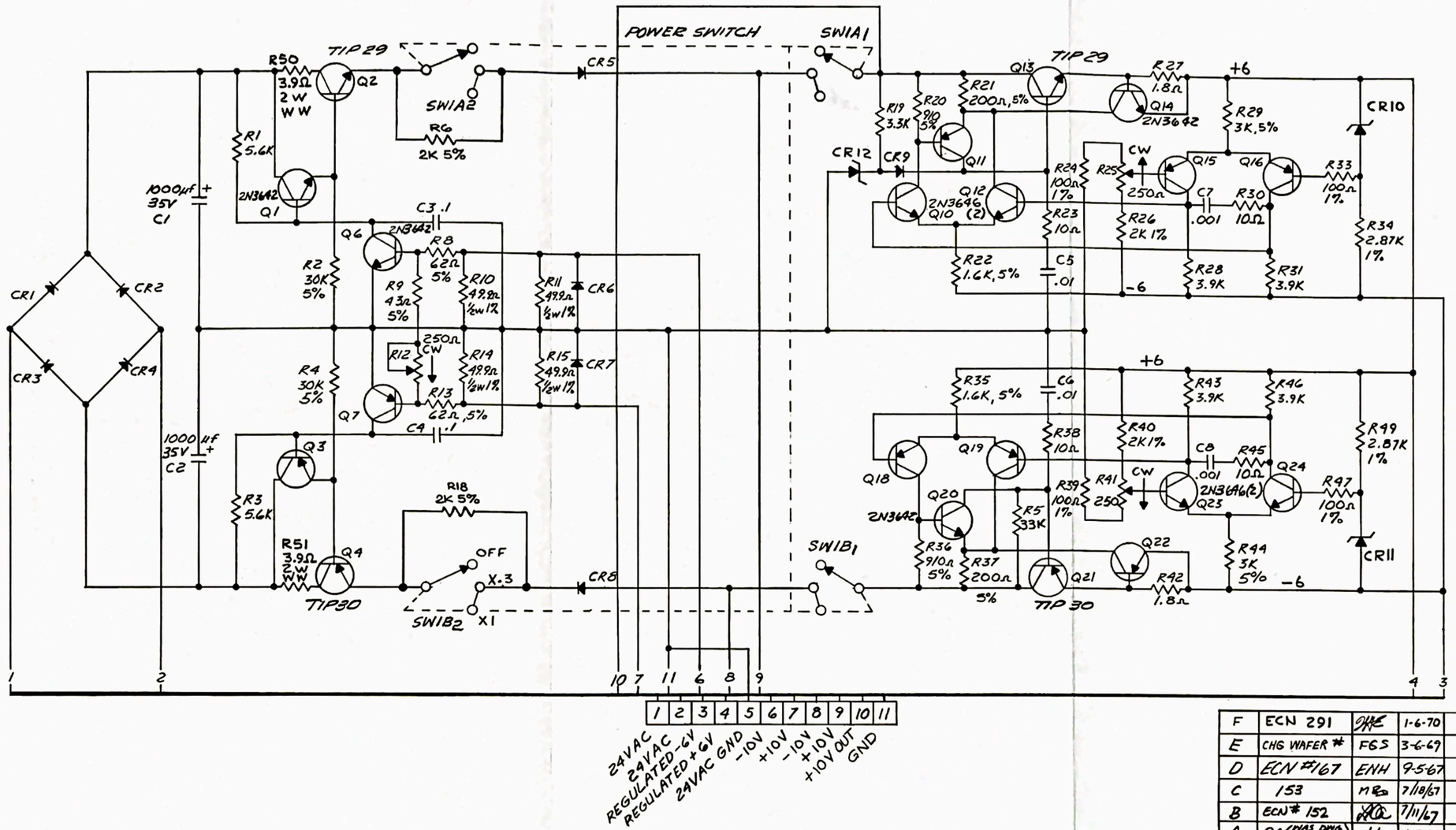

NOTE: UNLESS OTHERWISE SPECIFIED
1. ALL TRANSISTORS ARE 2N3638
2. ALL RESISTANCE IN OHMS, 1/2W, 10%
3. CAPACITANCE IN MICROFARADS
4. DIODES ARE SCE-1's.
5. PINS NUMBERED LEFT TO RIGHT AS VIEWED FROM COMPONENT SIDE OF BOARD.
6. ALL DIFFERENTIAL PAIRS ARE MATCHED FOR β
7. ZENER DIODES SELECTED PER WAVETEK SPEC 130-506 (CR9,10,11)
8 TRANSISTORS 2N3740 AND 40250 ARE INTERCHANGABLE ALTERNATES WITH TIP 29 AND TIP30 RESPECTIVELY

LATEST COMP DESIGNATOR
R51
C8
CR12
Q25

CHG	ECN NO.	BY	DATE	APP'D
H	ECN 428	Slack	5-3-72	
G	ECN 281	NG	12-16-70	T.O.

CHANGE	ECN NO.	BY	DATE	APP'D
F	ECN 291	JHE	1-6-70	T.O.
E	CHG WAFER #	FGS	3-6-69	T.O.
D	ECN #167	ENH	9-5-67	T.O.
C	153	MRB	7/18/67	T.O.
B	ECN # 152	[illegible]	7/11/67	T.O.
A	94 (HAS DWG 1128-105)	JW	1-5-67	T.O.

WAVETEK SAN DIEGO, CALIF

DRN PA Marsh DATE 7-21-66 APP P. Mackie

BATTERY REGULATOR BD

MODELS 110-116

NO C112-222H

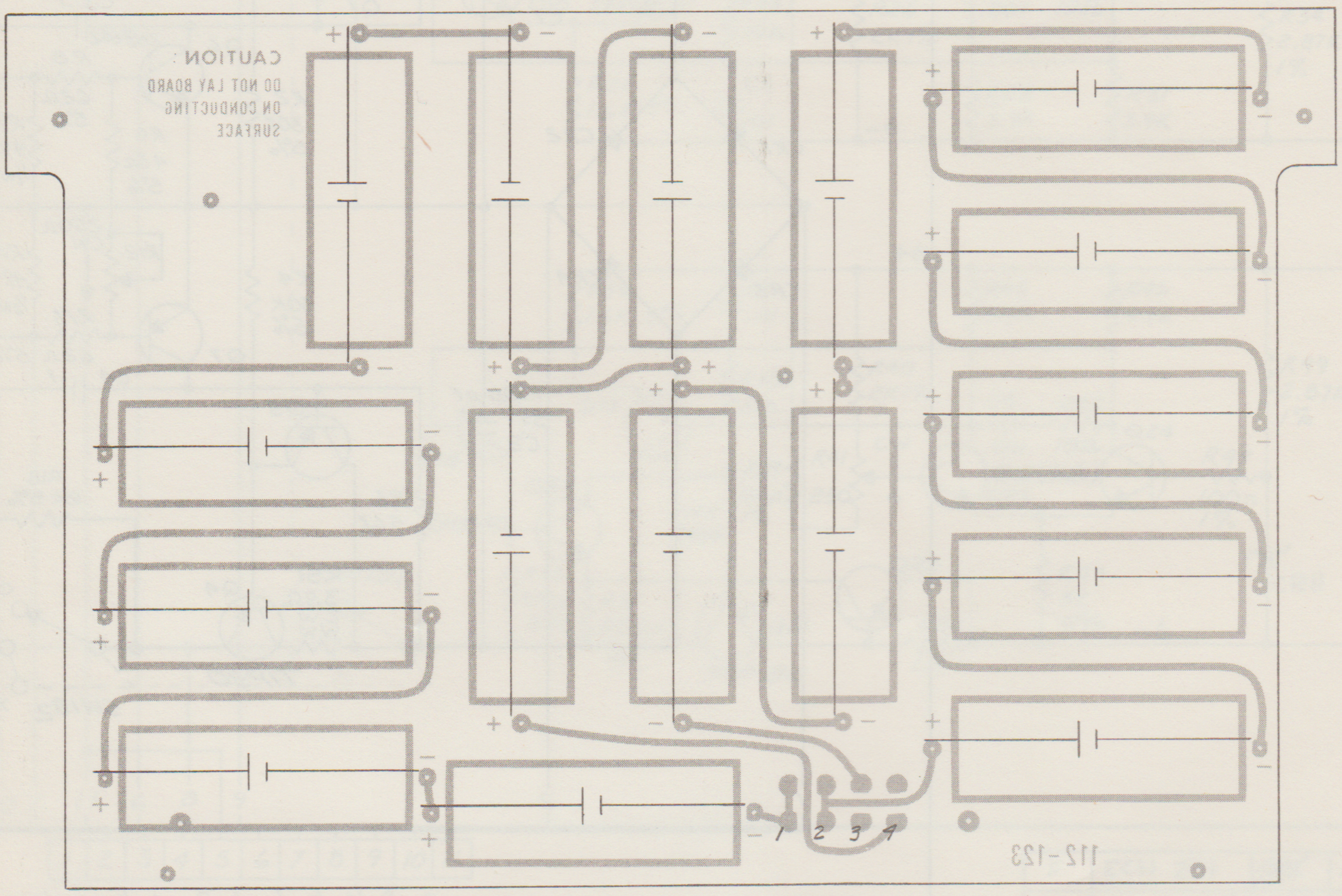

Battery Pack Assembly (112-023)

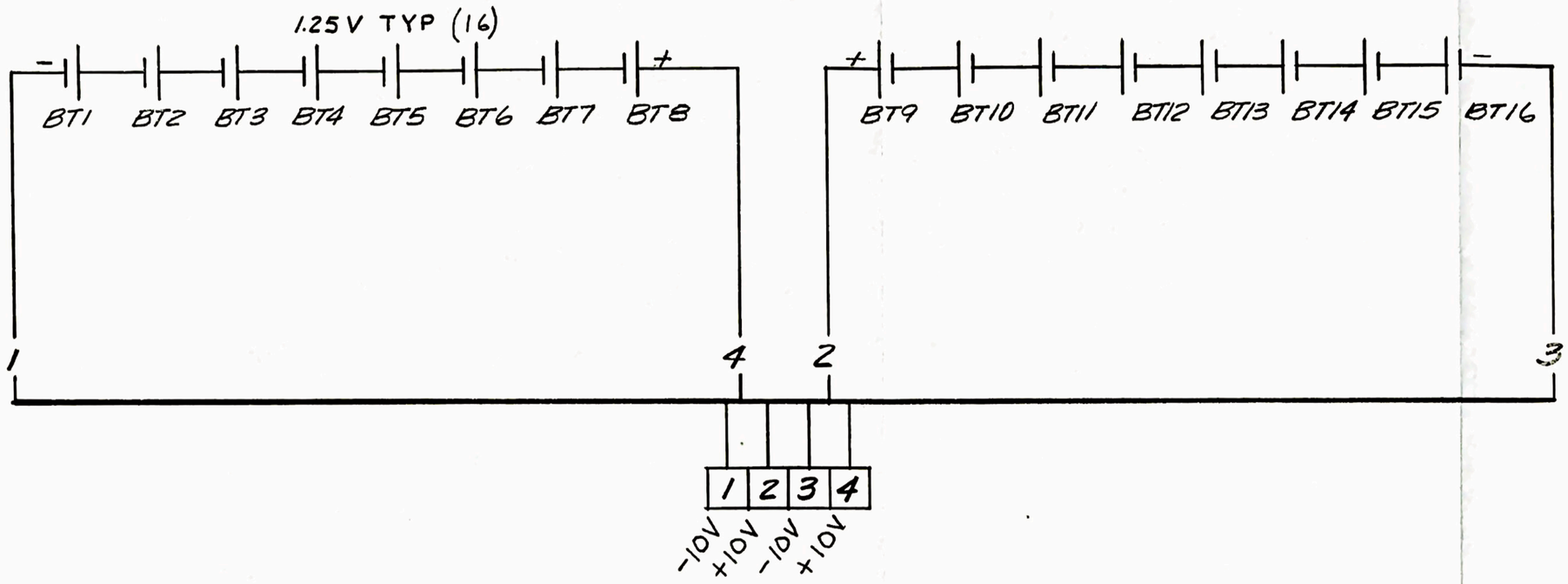

WAVETEK SAN DIEGO, CALIF.	
DWN: WHITELOCK DATE: 1-16-67	APPD: P. Markie

SCHEMATIC - BATTERY PACK

MODEL: 110-116	NO. B112-223

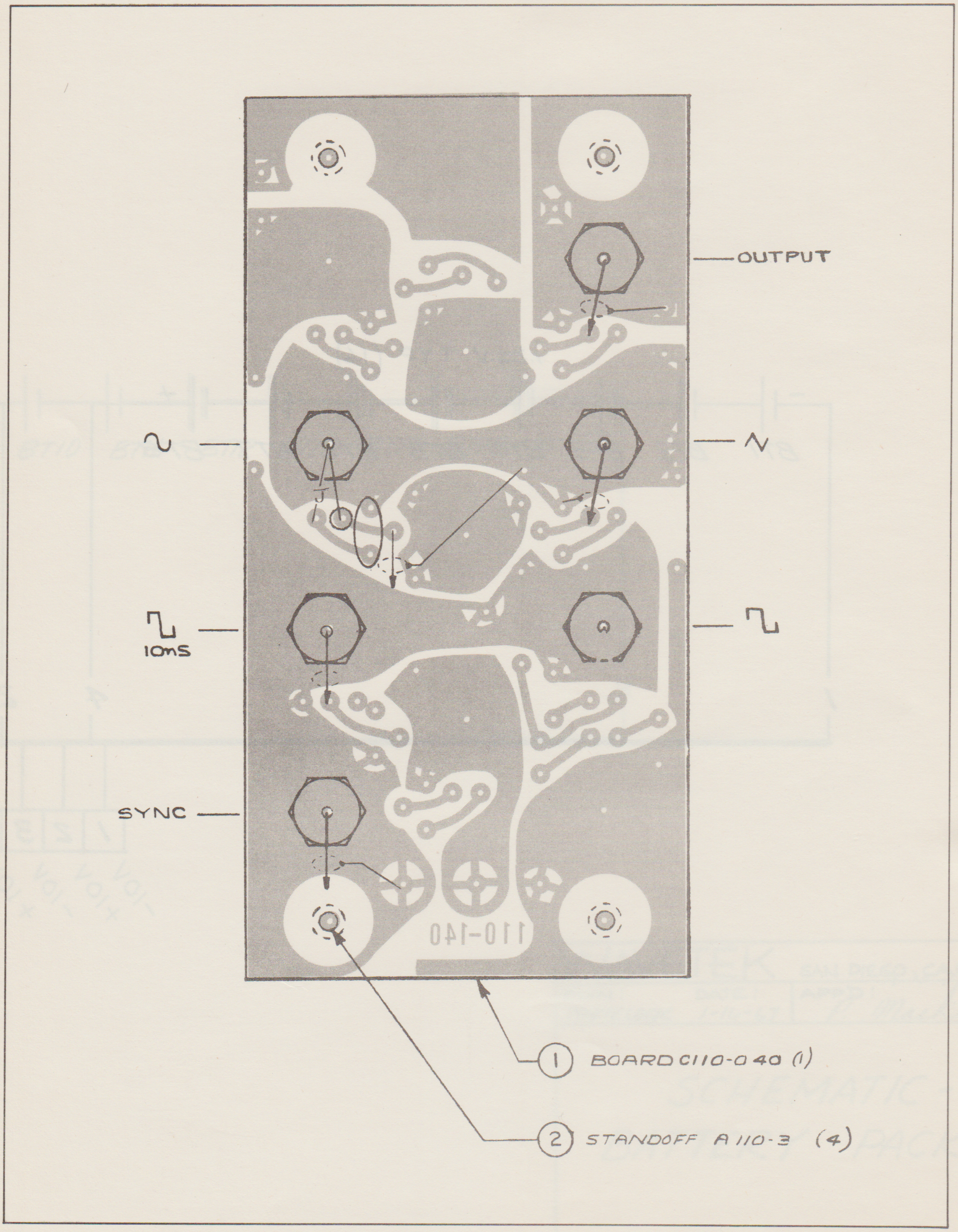

Connector Mounting Board Assembly (Rackmount Only)

REV	ECN	BY	DATE	APPR.
A	567	Shack	1/23/73	S

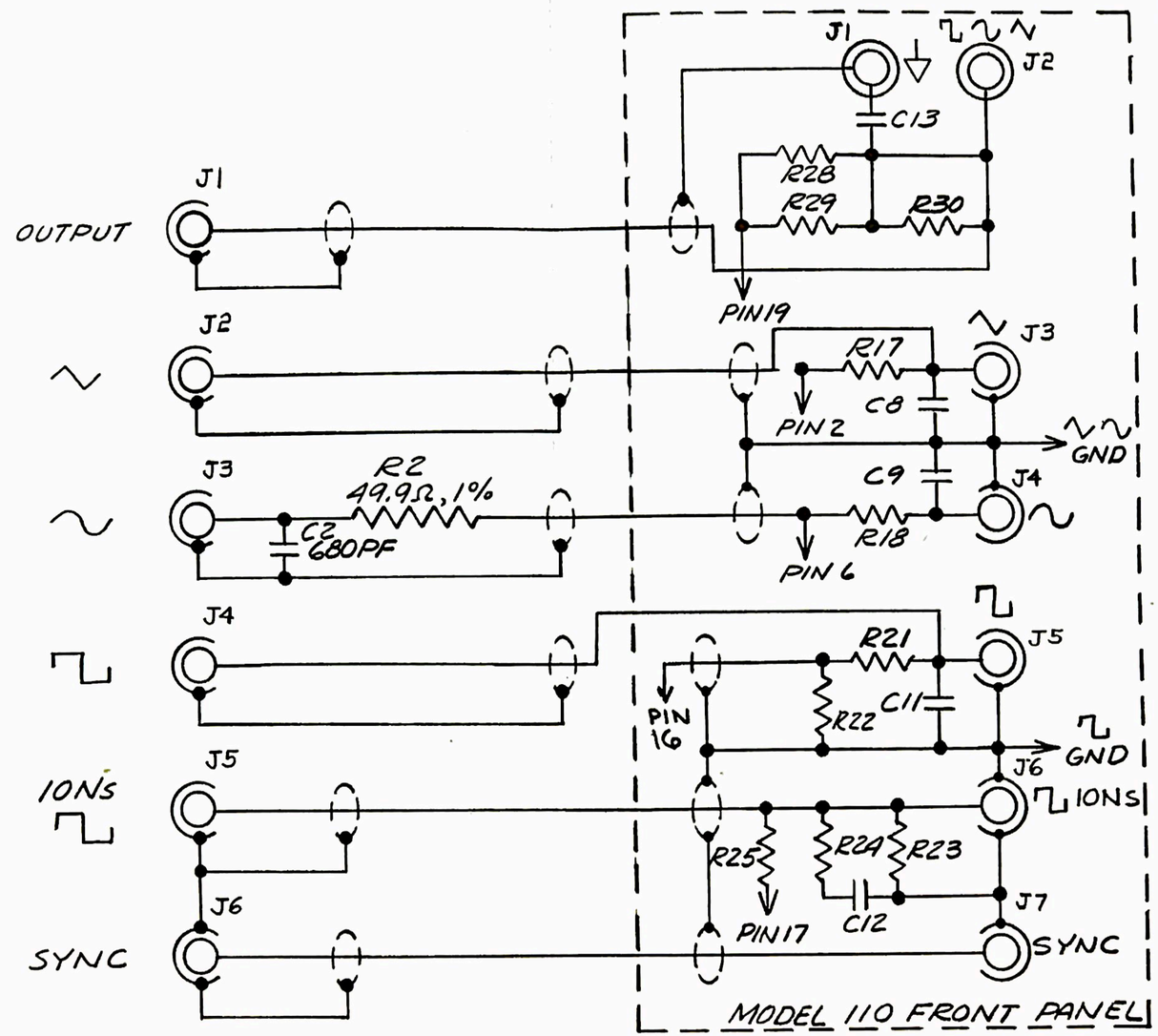

WAVETEK 8159 ENGINEER RD SAN DIEGO, CALIF

DWN: WHITELOCK DATE: 2-3-67 APP'D: P. Mizukas

SCHEMATIC-
CONNECTOR MTG.
BOARD

MODEL: 110 RACK MOUNT NO: B 110-238A

SECTION VI
PARTS LIST

GENERAL

This section contains a list of replaceable electronic parts and assemblies in the equipment; structural items and hardware such as screws and nuts are not included.

PARTS LIST ARRANGEMENT

The Parts List is arranged in the same sequence as the drawings in Section V.

LIST OF MANUFACTURERS

The following list of manufacturers should be used in conjunction with the "MFGR" column on the Parts List.

A/B	Allen Bradley, Milwaukee, Wisconsin
Accurate	Accurate Rubber, San Diego, Calif.
AMP	AMP Inc., Harrisburg, Penn.
A-R	American Radionics, Inc., Danbury, Conn.
ARCO	ARCO Electronics, Great Neck, L.I., N.Y.
CDE	Cornell Dubilier, Newark, New Jersey
Corning	Corning Glass Works, Bradford, Penn.
CRL	Centralab, Milwaukee, Wisconsin
ELCO	ELCO Corp., Willo Grove, Penn.
Erie	Erie Technological Products Inc., Erie, Penn.
Fair	Fairchild Semiconductor Corp., Palo Alto, Calif.
GE	General Electric Co., Semiconductor Products Div., Buffalo, N.Y.
Gould National	Gould Marathon Battery Co., St. Paul, Minnesota
H.H.S.	Herman H. Smith, Inc., Brooklyn, N.Y.
IMB	IMB Electronics Products, Santa Fe Springs, Calif.
IRC	International Resistance Co., Philadelphia, Penn.
Johnson	E.F. Johnson Co., Waseca, Minnesota
King	King Electronics Inc., Tuckahoe, N.Y.
Motorola	Motorola Semiconductor Products, Phoenix, Arizona
Semtech	Semtech Corp., Newbury Park, Calif.
Sprague	Sprague Electric Co., North Adams, Massachusetts
Stack	Stackpole Carbon Co., St. Mary's, Penn.
TI	Texas Instruments Inc., Dallas, Texas
USECO	USECO Div., Litton Industries, Van Nuys, Calif.
Wavetek	Wavetek, San Diego, Calif.

PARTS LIST ADDENDUM
–For–
MODEL 110 – 116
INSTRUCTION MANUALS
(DATE 1/72)

MAIN BOARD

Q39 should be 2N3646

POWER SUPPLY and OUTPUT AMPLIFIER BOARD

	REF DES	DESCRIPTION	TOTAL QTY	MFGR	MFGR NO.
Add	CR11	Zener	1	Wavetek	130-506
Correct	R21	Carbon ½w, 5%, 10Ω	4	Stack	RC20GF100J
Remove	Q1				
Change	Q6		2	Fair	2N3646
Change	Q8			Fair	2N3646
Add		Heatsink	2	RCA	NR-150A

PARTS LIST
—For—
Model 110
Mother Board Assembly
Drawing No. 111-010

REF DES	DESCRIPTION	TOTAL QTY	MFGR	MFGR NO.
110	Mother Board Assembly	1	Wavetek	110-010
	CAPACITORS			
C1	Electrolytic 16 V, 100 μF	2	Sprague	500D107GDC7
C2	Electrolytic 16 V, 100 μF		Sprague	500D107GDC7
	MISCELLANEOUS			
	Connector Pins	18	ELCO	013-5200
	Connector Pins	28	ELCO	113-3200
	Amp Pins	6	AMP	61182-2
	Standoff	2	Wavetek	110-320
	Nylon Bumper	7	Accurate	12592

PARTS LIST
—For—
Model 111
Mother Board Assembly
Drawing No. 110-010

REF DES	DESCRIPTION	TOTAL QTY	MFGR	MGFR NO.
111	Mother Board Assembly	1	Wavetek	111-010
	CAPACITORS			
C1	Electrolytic 16 V, 100 μF	2	Sprague	500D107GDC7
C2	Electrolytic 16 V, 100 μF		Sprague	500D107GDC7
	RESISTORS			
R1	Carbon 1 w, 10%, 470Ω	1	Stackpole	RC32GF471K
	MISCELLANEOUS			
	Connector Pins	20	ELCO	013-5200
	Connector Pins	41	ELCO	113-3200
	Amp Pins	6	AMP	61182-2
	Standoff	2	Wavetek	110-320
	Nylon Bumper	7	Accurate	12592

PARTS LIST
—For—
Model 110 - 116
Main Board
Drawing No. 110-012

REF DES	DESCRIPTION	TOTAL QTY	MFGR	MFGR NO.
110 - 116	Main Board	1	Wavetek	110-012
	CAPACITOR			
C1	Ceramic 1000 V, 10%, 100 pF	4	CRL	DD101
C2	Ceramic 1000 V, 10%, 100 pF		CRL	DD101
C3	Ceramic 1000 V, 10%, 390 pF	1	CRL	DD391
C4	Ceramic 1000 V, 10%, .001 mF	10	CRL	DD102
C5	Ceramic 1000 V, 10%, .001 mF		CRL	DD102
C6	Ceramic 10 V, 10%, .1 mF	6	CRL	UK10-104
C7	Ceramic 10 V, 10%, .1 mF		CRL	UK10-104
C8	Ceramic 1000 V, 10%, .001 mF		CRL	DD102
C9	Ceramic 1000 V, 10%, .001 mF		CRL	DD102
C10	Ceramic 1000 V, 10%, .001 mF		CRL	DD102
C11	Ceramic 1000 V, 10%, .001 mF		CRL	DD102
C12	Ceramic 1000 V, 10%, .001 mF		CRL	DD102
C13	Ceramic 1000 V, 10%, .001 mF		CRL	DD102
C14	Ceramic 1000 V, 10%, .001 mF		CRL	DD102
C15	Ceramic 1000 V, 10%, .001 mF		CRL	DD102
C16	Ceramic 1000 V, 10%, 100 pF		CRL	DD101
	110-220 pF, 113-150 pF			110-DD221
				113-DD151
C17	Ceramic 1000 V, 10%, 100 pF		CRL	DD101,
	110-220 pF, 113-150 pF			110-DD221
				113-DD151
C18	Ceramic 10 V, 10%, .1 mF		CRL	UK10-104
C19	Ceramic 10 V, 10%, .1 mF		CRL	UK10-104
C20	Ceramic 1000 V, 10%, 22 pF	3	CRL	DD220
C21	Ceramic 1000 V, 10%, 47 pF	3	CRL	DD470
C22	Ceramic 1000 V, 10%, 10 pF	1	CRL	DD100
C23	Ceramic 1000 V, 10%, 47 pF		CRL	DD470
C24	Ceramic 1000 V, 10%, 22 pF		CRL	DD220
C25	Ceramic 1000 V, 10%, 22 pF		CRL	DD220
C26	Ceramic 1000 V, 10%, 5 pF	1	CRL	DD050
C27	Ceramic 1000 V, 10%, 470 pF	3	CRL	DD471
C28	Ceramic 1000 V, 10%, 470 pF		CRL	DD471
C29	Ceramic 1000 V, 10%, 470 pF		CRL	DD471
C30	Ceramic 1000 V, 10%, 33 pF	1	CRL	DD330
C31	Ceramic 10 V, 10%, .1 mF		CRL	UK10-104
C32	Ceramic 10 V, 10%, .1 mF		CRL	UK10-104
C33	Ceramic 1000 V, 10%, 150 pF	1	CRL	DD151
C34	NOT USED			
C35	Ceramic 1000 V, 10%, 47 pF		CRL	DD470

REF DES	DESCRIPTION	TOTAL QTY	MFGR	MFGR NO.
	DIODES			
All CR's		21	Fair	FD6666
	RESISTORS			
R1	Metal Film ¼w, 1%, 110K	3	Corning	RN60D
R2	Metal Film ¼w, 1%, 1K	6	Corning	RN60D
R3	Metal Film ¼w, 1%, 110K		Corning	RN60D
R4	Potentiometer, 500Ω	1	A/B	FR501M
R5	Metal Film ¼w, 1%, 46.4K	1	Corning	RN60D
R6	Metal Film ¼w, 1%, 1K		Corning	RN60D
R7	Metal Film ¼w, 1%, 100K		Corning	RN60D
R8	Potentiometer, 10K	3	A/B	FR103M
R9	Metal Film ¼w, 1%, 3.01K	3	Corning	RN60D
R10	Carbon ½w, 5%, 3K	1	Stack	RC20GF302J
R11	Metal Film ¼w, 1%, 100Ω	2	Corning	RN60D
R12	Metal Film ¼w, 1%, 100Ω		Corning	RN60D
R13	Metal Film ¼w, 1%, 3.83K	4	Corning	RN60D
R14	Metal Film ¼w, 1%, 3.83K		Corning	RN60D
R15	Metal Film ¼w, 1%, 1K		Corning	RN60D
R16	Carbon ½w, 5%, 130Ω	1	Stack	RC20GF131J
R17	Carbon ½w, 5%, 15Ω	2	Stack	RC20GF150J
R18	Carbon ½w, 5%, 15Ω		Stack	RC20GF150J
R19	Metal Film ¼w, 1%, 2.87K	2	Corning	RN60D
R20	Potentiometer, 250Ω	12	A/B	FR251M
R21	Metal Film ¼w, 1%, 4.64K	10	Corning	RN60D
R22	Metal Film ¼w, 1%, 1K		Corning	RN60D
R23	Metal Film ¼w, 1%, 4.64K		Corning	RN60D
R24	Potentiometer, 250Ω		A/B	FR251M
R25	Metal Film ¼w, 1%, 2.87K		Corning	RN60D
R26	Metal Film ¼w, 1%, 511Ω		Corning	RN60D
R27	Metal Film ¼w, 1%, 511Ω		Corning	RN60D
R28	NOT USED			
R29	Metal Film ¼w, 1%, 3.16K	2	Corning	RN60D
R30	Potentiometer, 250Ω		A/B	FR251M
R31	Metal Film ¼w, 1%, 4.64K		Corning	RN60D
R32	Metal Film ¼w, 1%, 4.64K		Corning	RN60D
R33	Potentiometer, 250Ω		A/B	FR251M
R34	Metal Film ¼w, 1%, 3.16K		Corning	RN60D
R35	Metal Film ¼w, 1%, 825Ω	5	Corning	RN60D
R36	NOT USED			
R37	Metal Film ¼w, 1%, 3.83K		Corning	RN60D
R38	Potentiometer, 250Ω		A/B	FR251M
R39	Metal Film ¼w, 1%, 4.75K	2	Corning	RN60D
R40	Metal Film ¼w, 1%, 4.75K		Corning	RN60D
R41	Potentiometer, 250Ω		A/B	FR251M
R42	Metal Film ¼w, 1%, 3.83K		Corning	RN60D

REF DES	DESCRIPTION	TOTAL QTY	MFGR	MFGR NO.
	RESISTORS (Continued)			
R43	Metal Film ¼w, 1%, 2.49K	1	Corning	RN60D
R44	Metal Film ¼w, 1%, 10K	4	Corning	RN60D
R45	Metal Film ¼w, 1%, 4.64K		Corning	RN60D
R46	Potentiometer, 250Ω		A/B	FR251M
R47	Metal Film ¼w, 1%, 4.64K		Corning	RN60D
R48	Metal Film ¼w, 1%, 4.64K		Corning	RN60D
R49	Potentiometer, 250Ω		A/B	FR251M
R50	Metal Film ¼w, 1%, 4.64K		Corning	RN60D
R51	Metal Film ¼w, 1%, 2.37K	1	Corning	RN60D
R52	Metal Film ¼w, 1%, 4.64K		Corning	RN60D
R53	Metal Film ¼w, 1%, 4.64K		Corning	RN60D
R54	Metal Film ¼w, 1%, 1K		Corning	RN60D
R55	Carbon ½w, 10%, 150Ω	2	Stack	RC20GF151K
R56	Metal Film ¼w, 1%, 1K		Stack	RC20GF151K
R57	Metal Film ¼w, 1%, 6.98K		Stack	RC20GF151K
R58	Metal Film ¼w, 1%, 10K		Stack	RC20GF151K
R59	Metal Film ¼w, 1%, 825Ω		Stack	RC20GF151K
R60	Potentiometer, 250Ω		A/B	FR251M
R61	Metal Film ¼w, 1%, 825Ω		Corning	RN60D
R62	Carbon ½w, 5%, 4.7K	1	Stack	RC20GF472J
R63	NOT USED			
R64	Potentiometer, 10K		A/B	FR103M
R65	NOT USED			
R66	Metal Film ¼w, 1%, 10K		Corning	RN60D
R67	Carbon, ½w, 5%, 150Ω		Stack	RC20GF151J
R68	Carbon ½w, 5%, 1K	4	Stack	RC20GF102J
R69	Metal Film ¼w, 1%, 6.98K		Corning	RN60D
R70	Carbon ½w, 5%, 47Ω	4	Stack	RC20GF470J
R71	Carbon ½w, 5%, 4.7Ω	2	Stack	RC20GF4R7J
R72	Carbon ½w, 5%, 4.7Ω		Stack	RC20GF4R7J
R73	Carbon ½w, 5%, 4.7Ω		Stack	RC20GF470J
R74	Metal Film ¼w, 1%, 825Ω		Corning	RN60D
R75	Metal Film ¼w, 1%, 825Ω		Corning	RN60D
R76	Carbon ½w, 5%, 750Ω	2	Stack	RC20GF751J
R77	Potentiometer, 250Ω		A/B	FR251M
R78	Potentiometer, 250Ω		A/B	FR251M
R79	Carbon ½w, 5%, 750Ω		Stack	RC20GF751J
R80	Metal Film ¼w, 1%, 3.01K		Corning	RN60D
R81	Metal Film ¼w, 1%, 2K	3	Corning	RN60D
R82	Metal Film ¼w, 1%, 2K		Corning	RN60D
R83	Metal Film ¼w, 1%, 3.01K		Corning	RN60D
R84	Carbon ½w, 10%, 470Ω	2	Stack	RC20GF471K
R85	Carbon ½w, 10%, 4.7K	2	Stack	RC20GF472K
R86	Carbon ½w, 5%, 4.7K		Stack	RC20GF472J
R87	Carbon ½w, 10%, 470Ω		Stack	RC20GF471K

REF DES	DESCRIPTION	TOTAL QTY	MFGR	MFGR NO.
	RESISTORS (Continued)			
R88	Carbon ½w, 5%, 1K		Stack	RC20GF102J
R89	Carbon ½w, 5%, 1K		Stack	RC20GF102J
R90	Carbon ½w, 10%, 560Ω		Stack	RC20GF561K
R91	Carbon ½w, 5%, 47Ω		Stack	RC20GF470J
R92	Carbon ½w, 5%, 62Ω		Stack	RC20GF620J
R93	Carbon ½w, 5%, 47Ω		Stack	RC20GF470J
R94	Carbon ½w, 10%, 560Ω		Stack	RC20GF561K
R95	Carbon ½w, 5%, 10Ω	2	Stack	RC20GF100J
R96	Carbon ½w, 10%, 2.2K	1	Stack	RC20GF222K
R97	Carbon ½w, 5%, 10Ω		Stack	RC20GF100J
R98	Metal Film ¼w, 1%, 21.5K	1	Corning	RN60D
R99	Potentiometer, 10K		A/B	FR103M
R100	Metal Film ¼w, 1%, 2K		Corning	RN60D
R101	Carbon ½w, 5%, 1K		Stack	RC20GF102J
R102	Carbon ½w, 5%, 100Ω	3	Stack	RC20GF101J
R103	Metal Fil ¼w, 1%, 316Ω		Corning	RN60D
R104	Potentiometer, 250Ω		A/B	FR251M
R105	Metal Film ¼w, 1%, 511Ω		Corning	RN60D
R106	Carbon ½w, 5%, 100Ω		Corning	RC20GF101J
R107	Carbon ½w, 5%, 100Ω		Corning	RC20GF101J
R108	Carbon ½w, 10%, 1.2K	2	Corning	RC20GF122K
R109	Carbon ½w, 10%, 1.2K		Corning	RC20GF122K
R110	Carbon, ½w, 10%, 10K	1	Corning	RC20GF103K
R111	Metal Film ¼w, 1%, 10K		Corning	RN60D
R112	Carbon ½w, 10%, 270Ω	1	Stack	RC20GF271K
R113	Metal Film ¼w, 1%, 1.62K	2	Corning	RN60D
R114	Metal Film ¼w, 1%, 1.62K		Corning	RN60D
R115	Metal Film ¼w, 1%, 6.98K		Corning	RN60D
R116	Metal Film ¼w, 1%, 6.98K		Corning	RN60D
R117	NOT USED			
R118	NOT USED			
R119	Carbon ½w, 5%, 30Ω	1	Stack	RC20GF300J
	TRANSISTORS			
Q1	Dual Transistor ½ of Q1-Q4	2	GE	TD101
Q2	Dual Transistor ½ of Q2-Q3		GE	TD101
Q3	Dual Transistor ½ of Q2-Q3		GE	TD101
Q4	Dual Transistor ½ of Q1-Q4		GE	TD101
Q5	Match Pair Q5 & Q6		Fair	2N3640
Q6	Match Pair Q5 & Q6		Fair	2N3640
Q7	Match Pair Q7 & Q8		Fair	2N3646
Q8	Match Pair Q7 & Q8		Fair	2N3646
Q9		7	Fair	2N3646
Q10		8	Fair	2N3640

REF DES	DESCRIPTION	TOTAL QTY	MFGR	MFGR NO.
	TRANSISTORS (Continued)			
Q11		4	Fair	2N3642
Q12		4	Fair	2N3638
Q13			Fair	2N3642
Q14			Fair	2N3638
Q15			Fair	2N3642
Q16			Fair	2N3638
Q17			Fair	2N3642
Q18			Fair	2N3638
Q19	Beta & Bve Match with Q20	1 pr	Fair	2N3642
Q20	Beta & Vbe Match with Q19		Fair	2N3642
Q21	Beta & Vbe Match with Q22	2 pr	Fair	2N3640
Q22	Beta & Vbe Match with Q21		Fair	2N3640
Q23			Fair	2N3646
Q24			Fair	2N3640
Q25			Fair	2N3640
Q26			Fair	2N3646
Q27			Fair	2N3646
Q28			Fair	2N3640
Q29			Fair	2N3640
Q30			Fair	2N3646
Q31	Switch Set Q31 & Q33		Fair	2N3640
Q32	Switch Set Q32 & Q34		Fair	2N3646
Q33	Switch Set Q31 & Q33		Fair	2N3640
Q34	Switch Set Q32 & Q34		Fair	2N3646
Q35	(Not used on 113)		Fair	2N3646
Q36			Fair	2N3646
Q37			Fair	2N3640
Q38			Fair	2N3640
Q39			Fair	2N3640
	MISCELLANEOUS			
	Transistor Sockets	4	ELCO	05-3303
	Connector Pins	13	ELCO	013-5200

PARTS LIST
–For–
Models 111, 112, 115 & 116
VCG Board Assembly
Drawing No. 111-018

REF DES	DESCRIPTION	TOTAL QTY	MFGR	MFGR NO.
111, 112, 115 & 116	VCG Board Assembly	1	Wavetek	111-018
	CAPACITORS			
C1	Ceramic 50 V, .01μF,115/116 only	1	CRL	CK103
C2	Mylar 100 V, 10%, .033μF, 115/116 only	1	CDE	WMF1S33
C3	Ceramic 1000V, 10% .0015μF	1	CRL	DD152
C4	Ceramic 20 V, .1μF	2	CRL	UK20-104
C5	Ceramic 1000 V, 10%, 5 pF	2	CRL	DD050
C6	Ceramic 1000 V, 10%, .001μF	1	CRL	DD102
C7	Electrolytic 16 V, 100μF	3	Sprague	500D107G016DC7
C8	Ceramic 1000 V, 10% 100 pF	1	CRL	DD101
C9	Ceramic 10 V, .1μF	2	CRL	UK10-104
C10	Ceramic 20 V, .1μF		CRL	UK20-104
C11	Ceramic 10 V, .1μF		CRL	UK10-104
C12	Electrolytic 16 V, 100μF		Sprague	500D107G016DC7
C13	Electrolytic 16 V, 100μF		Sprague	500D107G016DC7
C14	Ceramic 1000 V 10% 330 pF	1	CRL	DD331
C15	Ceramic 1000 V, 10% 5 pF, 115/116 100 pF		CRL	DD050 115/116 DD101
	DIODES			
CR1		4	Fair	FD6666
CR2			Fair	FD6666
CR3			Fair	FD6666
CR4			Fair	FD6666
	RESISTORS			
R1	Carbon ½w, 5%, 2.4K, 115/116 only		Stack	RC20GF242J
R2	Carbon ½w, 5%, 2.4K, 115/116 only		Stack	RC20GF242J
R3	Carbon ½w, 10%, 560Ω, 115/116 only	1	Stack	RC20GF561K
R4	NOT USED			
R5	Metal Film ¼w, 1%, 95.3K	1	Corning	RN60D
R6	Metal Film ¼w, 1%, 12.1K	1	Corning	RN60D
R7	Metal Film ¼w, 1%, 10K	1	Corning	RN60D
R8	Potentiometer 1K	1	A/B	FR102M
R9	Potentiometer 10K	3	A/B	FR103M
R10	Metal Film ¼w, 1%, 464	2	Corning	RN60D
R11	Metal Film ¼w, 1%, 3.83K	1	Corning	RN60D
R12	Metal Film ¼w, 1%, 6.19	1	Corning	RN60D
R13	Potentiometer 500Ω	4	A/B	FR501M
R14	Potentiometer 500Ω		A/B	FR501M
R15	Metal Film ¼w, 1%, 2.87K	1	Corning	RN60D

REF DES	DESCRIPTION	TOTAL QTY	MFGR	MFGR No.
	RESISTORS (Continued)			
R16	Carbon ½w, 10%, 1.2K	1	Stack	RC20GF122K
R17	Carbon ½w, 5%, 2K	3	Stack	RC20GF202J
R18	Carbon ½w, 10% 220K	3	Stack	RC20GF224K
R19	Carbon ½w, 5% 2.4K	4	Stack	RC206F242J
R20	Carbon ½w, 10% 12K	2	Stack	RC20GF123K
R21	NOT USED			
R22	Carbon ½w, 10% 220K		Stack	RC20GF224K
R23	Metal Film ¼w, 1% 464K		Corning	RN60D
R24	Metal Film ¼w, 1% 1.5K	1	Corning	RN60D
R25	Metal Film ¼w, 1%, 3.01K	1	Corning	RN60D
R26	Carbon ½w, 5% 2K		Stack	RC20GF202J
R27	Carbon ½w, 5% 2K		Stack	RC20GF202J
R28	Carbon ½w, 10%, 220K		Stack	RC20GF224K
R29	Carbon ½w, 10% 12K		Stack	RC20GF123K
R30	Carbon ½w, 5% 2.4K		Stack	RC20GF242J
R31	Metal Film ¼w, 1% 909Ω	1	Corning	RN60D
R32	Metal Film ¼w, 1% 1.62K	1	Corning	RN60D
R33	Potentiometer 500Ω		A/B	FR501M
R34	Potentiometer 500Ω		A/B	FR501M
R35	Metal Film ¼w, 1% 2.37K	1	Corning	RN60D
R36	Carbon ½w, 10% 1.8K	1	Stack	RC20GF182K
R37	Carbon ½w, 5% 2.4K		Stack	RC20GF242J
R38	Carbon ½w, 5% 2.4K		Stack	RC20GF242J
R39	Carbon ½w, 5% 100Ω	2	Stack	RC20GF101J
R40	Carbon ½w, 10% 680Ω	1	Stack	RC20GF681K
R41	Carbon ½w, 5% 100Ω		Stack	RC20GF101J
R42	Carbon ½w, 5% 47Ω	3	Stack	RC20GF470J
R43	Carbon ½w, 5%, 1.6K	1	Stack	RC20GF162J
R44	Carbon ½w, 5%, 47Ω		Stack	RC20GF470J
R45	Carbon ½w, 5%, 47Ω		Stack	RC20GF470J
R46	Potentiometer 10K		A/B	FR103M
R47	NOT USED			
R48	Carbon ½w, 5% 10Ω	2	Stack	RC20GF100J
R49	Carbon ½w, 5% 10Ω		Stack	RC20GF100J
R50	Carbon ½w, 5% 91Ω	1	Stack	RC20GF910J
R51	Potentiometer 10K		A/B	FR103M
R52	Metal Film ¼w, 1% 46.4K	1	Corning	RN60D
R53	Metal Film ¼w, 1% 110K	1	Corning	RN60D
R54	Carbon ½w, 10% 470Ω	1	Stack	RC20GF471K
	TRANSISTORS			
Q1		4	Fair	2N3640
Q2	Match Pair Q2 & Q3	1 pr	Fair	2N3640
Q3	Match Pair Q2 & Q3		Fair	2N3640

REF DES	DESCRIPTION	TOTAL QTY	MFGR	MFGR NO.
	TRANSISTOR (Continued)			
Q4	Match Pair Q4 & Q5	1 pr	Fair	2N3646
Q5	Match Pair Q4 & Q5		Fair	2N3646
Q6		1	Fair	2N3638
Q7			Fair	2N3640
Q8			Fair	2N3640
Q9			Fair	2N3646
Q10		1	Fair	2N3640
	INTEGRATED CIRCUITS			
IC1		2	Motorola	MC1712CG
IC2			Motorola	MC1712CG
	MISCELLANEOUS			
	Transistor Sockets	2	Elco	05-3303
	Connector Pin	13	Elco	013-5200
	Terminal	8		

PARTS LIST
—For—
Model 110 - 116
Power Supply and Output Amp
Drawing No. 110-013 W

REF DES	DESCRIPTION	TOTAL QTY	MFGR	MFGR NO.
110-116	Power Supply and Output Amp	1	Wavetek	110-013
	CAPACITORS			
C1	Electrolytic 15 V, 1900μF	2	Sprague	39D198G015GL4
C2	Electrolytic 15 V, 1900μF		Sprague	39D198G015GL4
C3	Ceramic 10 V, .1μF	7	CRL	UK10-104
C4	Ceramic 1000 V, 10%, .001μF	1	CRL	DD102
C5	Ceramic 10 V, .1μF		CRL	UK10-104
C6	Ceramic 10 V, .1μF		CRL	UK10-104
C7	Ceramic 10 V, .1μF		CRL	UK10-104
C8	Ceramic 10 V, .1μF		CRL	UK10-104
C9	NOT USED			
C10	NOT USED			
C11	Variable 3 to 12 pF	1	Erie	505-001-17A
C12	Ceramic 50 V .01μF	2	CRL	CK103
C13	NOT USED			
C14	Electrolytic 35 V, 1000μF	2	Sprague	39D108G035GL4
C15	Electrolytic 35 V, 1000μF		Sprague	39D108G035GL4
C16	NOT USED			
C17	Ceramic 1000 V, 10%, 47 pF	1	CRL	DD470
C18	Ceramic 50 V, .01μF		CRL	CK103
C19	Ceramic 10 V .1μF		CRL	UK10-104
C20	Ceramic 10 V .1μF		CRL	UK10-104
C21	CERAMIC 220pf	1	CRL	DD 221
	DIODES			
CR1		8	Semtech	SCE-1
CR2			Semtech	SCE-1
CR3			Semtech	SCE-1
CR4			Semtech	SCE-1
CR5		2	Fair	FD6666
CR6			Fair	FD6666
CR7			Semtech	SCE-1
CR8			Semtech	SCE-1
CR9			Semtech	SCE-1
CR10			Semtech	SCE-1
	RESISTORS			
R1	Metal Film ¼w, 1%, 100Ω	3	Corning	RN60D
R2	Metal Film ¼w, 1%, 1.78K	1	Corning	RN60D
R3	Carbon ½w, 10%, 2.7K	3	Stack	RC20GF272K
R4	Carbon ½w, 10%, 3.9K	2	Stack	RC20GF392K
R5	Carbon ½w, 10%, 2.2K	3	Stack	RC20GF222K

REF DES	DESCRIPTION	TOTAL QTY	MFGR	MFGR NO.
	RESISTORS (Continued)			
R6	Metal Film ¼w, 1%, 511Ω	1	Corning	RN60D
R7	Carbon ½w, 5%, 56Ω	1	Stack	RC20GF560J
R8	METALFILM ⅛W 1% 2.37K	1	CORNING	RN55D ECN 1207 REV U
R9	Potentiometer, 250Ω	3	A/B	FR251M
R10	NOT USED			
R11	Carbon ½w, 10%, 3.9K	2	Stack	RC20GF392K
R12	Carbon ½w, 10%, 2.7K		Stack	RC20GF272K
R13	NOT USED			
R14	Carbon ½w, 5%, 100Ω	4	Stack	RC20GF101J
R15	Carbon ½w, 10%, 2.2K		Stack	RC20GF222K
R16	Carbon ½w, 10%, 2.2K		Stack	RC20GF222K
R17	Carbon ½w, 5%, 100Ω		Stack	RC20GF101J
R18	Wirewound 5w, 10%, 10Ω	2	IRC	PW-5
R19	Wirewound 5w, 10%, 10Ω		IRC	PW-5
R20	Carbon ½W,5% 4.7K	1	Stack	RC20GF472J
R21	Carbon ½w, 5% 4.7K	1	Stack	RC20GF100J
R22	Carbon ½w, 5%, 100Ω		Stack	RC20GF101J
R23	Carbon ½w, 5%, 100Ω		Stack	RC20GF101J
R24	Potentiometer, 250Ω		A/B	FR251M
R25	Metal Film ¼w, 1%, 1K	4	Corning	RN60D
R26	Metal Film ¼w, 1%, 1K		Corning	RN60D
R27	Metal Film ¼w, 1%, 1K		Corning	RN60D
R28	Metal Film ¼w, 1%, 21.5Ω	1	Corning	RN60D
R29	NOT USED			
R30	NOT USED			
R31	Potentiometer, 250Ω		A/B	FR251M
R32	Metal Film ¼w, 1%, 909Ω	1	Corning	RN60D
R33	Metal Film ¼w, 1%, 3.32K	2	Corning	RN60D
R34	Metal Film ½w, 1%, 100Ω		Corning	RN60D
R35	Metal Film ¼w, 1%, 100Ω		Corning	RN60D
R36	Metal Film ¼w, 1%, 7.5K	1	Corning	RN60D
R37	Metal Film ¼w, 1%, 6.98K	1	Corning	RN60D
R38	Metal Film ¼w, 1%, 3.32K		Corning	RN60D
R39	Metal Film ¼w, 1%, 1K		Corning	RN60D
R40	Metal Film ¼w, 1%, 10K	2	Corning	RN60D
R41	Potentiometer 10K	1	A/B	FR103M
R42	Metal Film ¼w, 1%, 10K		Corning	RN60D
R43	NOT USED			
R44	Carbon ½w, 5%, 150Ω	1	Stack	RC20GF151J
R45	Carbon ½w, 5%, 3.6K	2	Stack	RC20GF362J
R46	Carbon 2w, 5%, 91Ω	2	Stack	RC42GF910J
R47	Carbon ½w, 5%, 6.8Ω	2	Stack	RC20GF6R8J
R48	Carbon ½w, 5%, 6.8Ω		Stack	RC20GF6R8J
R49	Carbon 2w, 5%, 91Ω		Stack	RC42GF910J
R50	Metal Film ¼w, 1%, 49.9	2	Corning	RN60D
R51	Metal Film ¼w, 1%, 49.9		Corning	RN60D

REF DES	DESCRIPTION	TOTAL QTY	MFGR	MFGR NO.
	RESISTORS (Continued)			
R52	NOT USED			
R53	Carbon ½w, 5%, 3.6K		Stack	RC20GF362J
R54	Carbon ½w, 5%, 10Ω		Stack	RC20GF100J
R55	Carbon ½w, 5%, 10Ω		Stack	RC20GF100J
R56	Carbon ½w, 5%, 10Ω		Stack	RC20GF100J
R57	Carbon ½w, 5%, 22Ω	1	Stack	RC20GF220J
R58	113 only Metal Film ¼w, 1%, 4.99K	1	Corning	RN60D
R59	Carbon 1w, 10%, 1K	1	Stack	RC32GF102K
R60	Carbon ½w, 5%, 1K	2	Stack	RC20GF102J
R61	Carbon ½w, 5%, 1K		Stack	RC20GF102J
	TRANSISTORS			
Q1	Selected for zener V. of 6.6 V ±.3 V	1	Wavetek	130-506
Q2	Match pair Q2 & Q3	1 pr	Fair	2N3646
Q3	Match pair Q2 & Q3		Fair	2N3646
Q4	Match pair Q4 & Q5	1 pr	Fair	2N3638
Q5	Match pair Q4 & Q5		Fair	2N3638
Q6		1	Fair	2N3646
Q7		4	Fair	2N3638
Q8			Fair	2N3638
Q9			Fair	2N3638
Q10		1	TI	TIP29
Q11			Fair	2N3638
Q12		1	TI	TIP30
Q13	Match pair Q13 & Q14	1 pr	Fair	2N3642
Q14	Match pair Q13 & Q14		Fair	2N3642
Q15	Match pair Q15 & Q16 (-71)	1 pr	Fair	2N2905A
Q16	Match pair Q15 & Q16(-71)		Fair	2N2905A
Q17	(-72)	1	Fair	2N3299
Q18	(-71)	1	Fair	2N2905 A
	MISCELLANEOUS			
	Transipad	12		10123N
	Heatsink	2	Wakefield	NF207
	Connector Pin	15	ELCO	013-5200
	Terminal	17	USECO	2010B-1
	Terminal	3	USECO	2005-B
	Spacer	[redacted]	Wavetek	8480

PARTS LIST
—For—
Models 110 & 111
Mother Board for Battery Units Only
Drawing No. 110-039

REF DES	DESCRIPTION	TOTAL QTY	MFGR	MFGR NO.
110 & 111	Mother Board/Battery Only	1	Wavetek	110-039
	CAPACITOR			
C1	Electrolytic 16 V, 100μF	2	Sprague	500D107G106DC7
C2	Electrolytic 16 V, 100μF		Sprague	500D107G106DC7
	MISCELLANEOUS			
	Connector Pins	20	ELCO	013-5200
	Connector Pins	41	ELCO	113-3200
	Nylon Bumper	11	Accurate	12592
	Standoff	2	Wavetek	110-320

PARTS LIST
—For—
Model 110 - 116
Battery Regulator Board
Drawing No. 112-022

REF DES	DESCRIPTION	TOTAL QTY	MFGR	MFGR NO.
110 - 116	Battery Regulator Board	1	Wavetek	112-022
	CAPACITORS			
C1	Electrolytic 35 V, 1000μF	2	Sprague	39D108G035GL4
C2	Electrolytic 35 V, 1000μF		Sprague	39D108G035GL4
C3	Mylar 100 V, 10%, .1μF	2	CDE	WMF 1P1
C4	Mylar 100 V, 10%, .1μF		CDE	WMF 1P1
C5	Ceramic 50 V, .01μF	2	CRL	CK-103
C6	Ceramic 50 V, .01μF		CRL	CK-103
C7	Ceramic 1000 V, 10%, .001μF	2	CRL	DD-102
C8	Ceramic 1000 V, 10%, .001μF		CRL	DD-102
	DIODES			
CR1		9	Semtech	SCE-1
CR2			Semtech	SCE-1
CR3			Semtech	SCE-1
CR4			Semtech	SCE-1
CR5			Semtech	SCE-1
CR6			Semtech	SCE-1
CR7			Semtech	SCE-1
CR8			Semtech	SCE-1
CR9			Semtech	SCE-1
	RESISTORS			
R1	Carbon ½w, 10% 5.6K	2	Stack	RC20GF562K
R2	Carbon ½w, 5% 30K	2	Stack	RC20GF303J
R3	Carbon ½w, 10%, 5.6K		Stack	RC20GF562K
R4	Carbon ½w, 5%, 30K		Stack	RC20GF303J
R5	Carbon ½w, 10%, 33K	1	Stack	RC20GF333K
R6	Carbon ½w, 5%, 2K	2	Stack	RC20GF202J
R7	NOT USED			
R8	Carbon ½w, 5%, 62Ω	2	Stack	RC20GF620J
R9	Carbon ½w, 5%, 43Ω	1	Stack	RC20GF430J
R10	Metal Film ¼w, 1%, 49.9Ω	4	Corning	RN65D
R11	Metal Film ½w, 1%, 49.9Ω		Corning	RN65D
R12	Potentiometer, 250Ω	3	A/B	FR251M
R13	Carbon ½w, 5%, 62Ω		Stack	RC20GF620J
R14	Metal Film ½w, 1%, 49.9Ω		Corning	RN65D
R15	Metal Film ½w, 1%, 49.9Ω		Corning	RN65D
R16	NOT USED			
R17	NOT USED			
R18	Carbon ½w, 5%, 2K		Stack	RC20GF202J
R19	Carbon ½w, 10%, 3.3K	1	Stack	RC20GF332K

REF DES	DESCRIPTION	TOTAL QTY	MFGR	MFGR NO.
	RESISTORS (Continued)			
R20	Carbon ½w, 5%, 910Ω	1	Stack	RC20GF911J
R21	Carbon ½w, 5%, 200Ω	2	Stack	RC20GF201J
R22	Carbon ½w, 5%, 1.6K	2	Stack	RC20GF162J
R23	Carbon ½w, 5%, 10Ω	4	Stack	RC20GF100J
R24	Metal Film ¼w, 1%, 100Ω	4	Corning	RN60D
R25	Potentiometer, 250Ω		A/B	FR251M
R26	Metal Film ¼w, 1%, 2K	2	Corning	RN60D
R27	Carbon ½w, 5%, 1.8Ω	2	Stack	RC20GF1R8J
R28	Carbon ½w, 10%, 3.9K	4	Stack	RC20GF392K
R29	Carbon ½w, 5%, 3K	2	Stack	RC20GF302J
R30	Carbon ½w, 5%, 10Ω		Stack	RC20GF100J
R31	Carbon ½w, 10%, 3.9K		Stack	RC20GF392K
R32	NOT USED			
R33	Metal Film ¼w, 1%, 100Ω		Corning	RN60D
R34	Metal Film ¼w, 1% 2.87K	2	Corning	RN60D
R35	Carbon ½w, 5%, 1.6K		Stack	RC20GF162J
R36	Carbon ½w, 5%, 910Ω		Stack	RC20GF911J
R37	Carbon ½w, 5%, 200Ω		Stack	RC20GF201J
R38	Carbon ½w, 5%, 10Ω		Stack	RC20GF100J
R39	Metal Film ¼w, 1%, 100Ω		Corning	RN60D
R40	Metal Film ¼w, 1%, 2K		Corning	RN60D
R41	Potentiometer, 250Ω		A/B	FR251M
R42	Carbon ½w, 5%, 1.8Ω		Stack	RC20GF1R8J
R43	Carbon ½w, 10%, 3.9K		Stack	RC20GF392K
R44	Carbon ½w, 5%, 3K		Stack	RC20GF302J
R45	Carbon ½w, 5%, 10Ω		Stack	RC20GF100J
R46	Carbon ½w, 10%, 3.9K		Stack	RC20GF392K
R47	Metal Film ¼w, 1%, 100Ω		Corning	RN60D
R48	NOT USED			
R49	Metal Film ¼w, 1%, 2.87K		Corning	RN60D
R50	Carbon 1w, 10%, 3.9Ω	2	Stack	RC20GF3R9K
R51	Carbon 1w, 10%, 3.9Ω		Stack	RC20GF3R9K
	TRANSISTORS			
Q1			Fair	2N3642
Q2			TI	TIP 29
Q3			Fair	2N3638
Q4			TI	TIP 30
Q5	NOT USED			
Q6			Fair	2N3642
Q7			Fair	2N3638
Q8	NOT USED			
Q9	Selected zener V for 6.6 V ±.3 V			
Q10	Match pair Q10 & Q12		Fair	2N3646

REF DES	DESCRIPTION	TOTAL QTY	MFGR	MFGR NO.
	TRANSISTORS (Continued			
Q11			Fair	2N3638
Q12	Match pair Q10 & Q12		Fair	2N3646
Q13			TI	TIP 29
Q14			Fair	2N3642
Q15			Fair	2N3638
Q16			Fair	2N3638
Q17	Selected zener V for 6.6 V ±.3 V			
Q18			Fair	2N3638
Q19			Fair	2N3638
Q20			Fair	2N3642
Q21			TI	TIP 30
Q22				2N3638
Q23	Match pair Q23 & Q24	1 pr	Fair	2N3646
Q24	Match pair Q23 & Q24		Fair	2N3646
Q25	Selected zener V for 6.6 V ±.3 V			
	MISCELLANEOUS			
SW1	Power Switch wafer	2	Wavetek	110-SW1-2
	Transipad	15		10123N
	Heatsink	4		NR-150A
	Spacer	8	H.H.S.	8480
	Connector Pin	11	ELCO	013-5200
	Terminal	4	USECO	2010B-1
	Terminal	3	USECO	2005B

PARTS LIST
—For—
Model 110-116
Battery Pack Board
Drawing No. 112-023

REF DES	DESCRIPTION	TOTAL QTY	MFGR	MFGR NO.
110-116	Battery Pack Assembly	1	Wavetek	112-023
	P/C Board 112-123	1	Wavetek	112-123
	P/C Board 112-124	1	Wavetek	112-124
	Battery	16	Gould National	1.2 SCL
	Connector Pin	4	ELCO	013-5200
	Standoff	5	Wavetek	013-033-4

REVISIONS			
REV	DESCRIPTION	DATE	APPROVED

PARTS LIST 111

LINE NO.	DESCRIPTION	MFGR	MFGR P/N	QTY	REF DES
1	CHASSIS	WAVETEK	110-340	1	
2	FRONT PANEL	WAVETEK	111-313-1	1	
3	COVER	WAVETEK	110-339	1	
4	END COVER	WAVETEK	110-333	1	
5	DIAL	WAVETEK	130-333	1	
6	DIAL KNOB	WAVETEK	130-308	1	
7	DIAL INDICATOR	WAVETEK	110-338	1	
8	SHAFT EXTENDER	WAVETEK	110-343	1	
9	TRANSFORMER	WAVETEK	110-500	1	
10	DETENT (ON/OFF SW)	WAVETEK	110-SW2A	1	
11	BINDING POST	WAVETEK	110-306(-1,-2)	1	
12	COVER PANEL	WAVETEK	110-342	1	
13					
14	KNOB (STD)	WAVETEK	130-314	5	
15	SPACER BAR	WAVETEK	110-344-1	2	
16	SPACER BAR	WAVETEK	110-344-2	2	
17	BAIL KIT	WAVETEK	130-507	1	
18	INDICATOR (ON/OFF)	WAVETEK	110-309	1	
19	MOTHER BOARD	WAVETEK	111-010	1	
20	MAIN BOARD	WAVETEK	111-012	1	
21	1ST SUB-PANEL BD	WAVETEK	111-042	1	
22	POWER SUPPLY BD	WAVETEK	110-013	1	
23	VCG BOARD	WAVETEK	111-018	1	
24	GUIDE TUBE	WAVETEK	110-310	1	
25					
26	SPACER	WAVETEK	8488	2	
27	DECAL, ON/OFF	WVTK	110-345	1	

PARTS LIST 111

LINE NO.	DESCRIPTION	MFGR	MFGR P/N	QTY	REF DES
28	SOLDER LUG	H.H. SMITH	1414-6	1	
29	SWITCH STOP	CTS	212-33-006	1	
30					
31	6-32x3/8 BLACK OXIDE TRUSS HD	ROTACO	COMMERCIAL	4	
32	HANDLE	USECO	14100	1	
33	SOLDER LUG	H. H. SMITH	1414-8	1	
34	FUSE BLOCK	LITTLEFUSE	357002	1	
35	FUSE HOLDER	LITTELFUSE	342012	1	
36	FUSE 3AG 1/4A 125V 3/8	LITTELFUSE	313.250	1	
37	FUSE 3AG 1AMP. 250V 1/8	LITTELFUSE	312.001	2	
38	POWER CORD	BELDEN	17258-5	1	
39	RECEPTACLE	SWITCHCRAFT	LAC3-G	1	
40	LOCK RING	TRUARC	5115-25	1	
41	GROMMET	ACCURATE	GB2172/3068	2	
42	FUSE 1/8 A 250V 3/8 (220 ONLY)	LITTLEFUSE	MDL 1/8 A	1	
43	COUPLER	H. H. SMITH	HHS-120	1	
44	WAFER	CTS	104-SW3-1	1	

REV	ECN	BY	DATE	APP
B	ECN 1200	RO	1-30-5	
A	ECN 820	[illegible]	1-4-74	

TOLERANCE UNLESS OTHERWISE SPEC
.XXX ± .010
.XX ± .030
ANGLES ± 0°30'

SCALE —#—

MATERIAL —#—

FINISH —#—

WAVETEK SAN DIEGO, CALIFORNIA

BY B. ROSMAN DATE 6-5-72 APP

TITLE CHASSIS ASSY

MODEL NO. 111 DWG NO. D111-041 REV B

THIS DOCUMENT CONTAINS PROPRIETARY INFORMATION AND DESIGN RIGHTS BELONGING TO WAVETEK AND MAY NOT BE REPRODUCED FOR ANY REASON EXCEPT CALIBRATION, OPERATION, AND MAINTENANCE WITHOUT WRITTEN AUTHORIZATION.

REVISIONS			
REV	DESCRIPTION	DATE	APPROVED

PARTS LIST 110

LINE NO.	DESCRIPTION	MFGR	MFGR P/N	QTY	REF DES
1	CHASSIS	WAVETEK	110-340	1	
2	FRONT PANEL	WAVETEK	110-341-1	1	
3	COVER	WAVETEK	110-339	1	
4	END COVER	WAVETEK	110-333	1	
5	DIAL	WAVETEK	130-333	1	
6	DIAL KNOB	WAVETEK	130-308	1	
7	DIAL INDICATOR	WAVETEK	110-338	1	
8	SHAFT EXTENDER	WAVETEK	110-343	1	
9	TRANSFORMER	WAVETEK	110-500	1	
10	DETENT (ON/OFF SW)	WAVETEK	110-SW2A	1	
11	BINDING POST	WAVETEK	110-306(-1,-2)	1	
12	COVER PANEL	WAVETEK	110-342	1	
13					
14	KNOB (STD)	WAVETEK	130-314	4	
15	SPACER BAR	WAVETEK	110-344-1	2	
16	SPACER BAR	WAVETEK	110-344-2	2	
17	BAIL KIT	WAVETEK	130-507	1	
18	INDICATOR (ON/OFF)	WAVETEK	110-309	1	
19	MOTHER BOARD	WAVETEK	110-010	1	
20	MAIN BOARD	WAVETEK	110-012	1	
21	1ST SUB-PANEL BD	WAVETEK	110-042	1	
22	POWER SUPPLY BD	WAVETEK	110-013	1	
23					
24	GUIDE TUBE	WAVETEK	110-310	1	
25	SWITCH STOP	CTS	212-33-006	1	
26	SPACER	WAVETEK	8488	2	
27	DECAL, ON/OFF	WVTK	110-345	1	

PARTS LIST 110

LINE NO.	DESCRIPTION	MFGR	MFGR P/N	QTY	REF DES
28	FUSE 1/8A 250V S/B (220 ONLY)	LITTLEFUSE	MDL 1/8	1	
29					
30					
31	6-32x3/8 BLACK OXIDE TRUSS	ROTACO	COMMERCIAL	4	
32	HANDLE	USECO	14100	1	
33	SOLDER LUG	H. H. SMITH	1414-8	1	
34	FUSE BLOCK	LITTLEFUSE	357002	1	
35	FUSE HOLDER	LITTELFUSE	342012	1	
36	FUSE 3AG 1AMP 250V F/B	LITTELFUSE	312.001	2	
37	FUSE 3AG 1/4A SLO-BLO	LITTELFUSE	313.250	1	
38	POWER CORD	BELDEN	17258-5	1	
39	RECEPTACLE	SWITCHCRAFT	LAC3-G	1	
40	LOCK RING	TRUARC	5115-25	1	
41	GROMMET	ACCURATE	GB2172/3068	2	
42	SOLDER LUG	H.H.SMITH	1414-6	1	
43	COUPLER	H. H. SMITH	HHS-120	1	
44	WAFER	CTS	104SW3-1	1	

REV	ECN	BY	DATE	APP
B	ECN 1200	Po	1-30-75	
A	ECN 820	Elmb	1-4-73	

TOLERANCE UNLESS OTHERWISE SPEC
.XXX ± .010
.XX ± .030
ANGLES ± 0°30'

WAVETEK SAN DIEGO, CALIFORNIA

SCALE —//—

BY B. Bergman DATE 6-5-72 APP

MATERIAL —//—

TITLE CHASSIS ASSY

FINISH —//—

MODEL NO. 110 DWG NO. D110-041 SHEET 2 of 2 REV B

THIS DOCUMENT CONTAINS PROPRIETARY INFORMATION AND DESIGN RIGHTS BELONGING TO WAVETEK AND MAY NOT BE REPRODUCED FOR ANY REASON EXCEPT CALIBRATION, OPERATION, AND MAINTENANCE WITHOUT WRITTEN AUTHORIZATION

REVISIONS			
REV	DESCRIPTION	DATE	APPROVED

PARTS LIST

LINE NO.	DESCRIPTION	MFGR	MFGR P/N	QTY	REF DES
1	FRONT SUB-PANEL BOARD	WAVETEK	B110-111E	1	
2	CAPACITORS				
3	VARIOHM 4.5 TO 25 PF	ERIE	503-001-37A	2	C1,C3
4	SILVER MICA 500 V, 5%, 75 PF	ARCO	DM 15-750J	1	C2
5	SILVER MICA 500 V, 5%, 68 PF	ARCO	DM 15-680J	1	C4
6	SILVER MICA 500 V, 1%, 910 PF	ARCO	DM 15-911F	1	C5
7	POLYSTYRENE 100 V, 1%, 0.1 MF	IMB	PA2B104F	1	C6
8	MYLAR 200 V, 10%, 5 @ 2 MF	A-R	WVTK-2MFW	1 SET	C7
9	CERAMIC 1000 V, 10%, 680 PF	CRL	DD-681	1	C8
10	CERAMIC 1000 V, 10%, 0.001 MF	CRL	DD-102	1	C9
11	CERAMIC 1000 V, 10%, 330 PF	CRL	DD-331	1	C10
12	CERAMIC 1000 V, 10%, 100 PF	CRL	DD-101	1	C11
13	CERAMIC 1000 V, 10%, 68 PF	CRL	DD-680	1	C12
14	CERAMIC 1000 V, 10%, 220 PF	CRL	DD-221	1	C13
15	RESISTORS				
16					
17	METAL FILM 1/4W, 1%, 4.64K	CORNING	RN60D	2	R2,R6
18	METAL FILM 1/4W, 1%, 46.4K	CORNING	RN60D	2	R4,R8
19	METAL FILM 1/4W, 1%, 464K	CORNING	RN60D	1	R10
20	CARBON 1/2W, 10%, 470Ω	STACK	RC20GF471K	1	R11
21	METAL FILM 1/4W, 1%, 42.2K	CORNING	RN60D	1	R12
22	METAL FILM 1/4W, 1%, 422K	CORNING	RN60D	1	R13
23	POTENTIOMETER, 1K	WAVETEK	A110-408	1	R15
24	METAL FILM 1/4W, 1%, 21.5Ω	CORNING	RN60D	1	R16

PARTS LIST

LINE NO.	DESCRIPTION	MFGR	MFGR P/N	QTY	REF DES
25	METAL FILM 1/4W, 1%, 49.9Ω	CORNING	RN60D	8	2
26	CARBON 1/2W, 10%, 27Ω	STACK	RC20GF270K	1	R19
27	CARBON 1/2W, 10%, 12K	STACK	RC20GF123K	1	R20
28	CARBON 1/2W, 5%, 2K	STACK	RC20GF202J	1	R22
29	CARBON 1/2W, 10%, 56Ω	STACK	RC20GF560K	1	R23
30	CARBON 1/2W, 5%, 33Ω	STACK	RC20GF330J	1	R24
31	CARBON 1/2W, 5%, 470Ω	STACK	RC20GF471J	1	R25
32	POTENTIOMETER, 1K	WAVETEK	A113-402	1	R26
33	CARBON 1/2W, 5%, 4.7Ω	STACK	RC20GF4R7J	2	R27,R35
34	CARBON 1/2W, 10%, 560Ω	STACK	RC20GF561K	1	R30
35	CARBON 1/2W, 5%, 1K	STACK	RC20GF102J	2	R32,R33
36	CARBON 1/2W, 5%, 10Ω	STACK	RC20GF100J	1	R34
37	TRIM			6	1
38	SWITCHES				
39	RANGE SWITCH	WAVETEK	A110-405	1	SW1
40	FUNCTION SWITCH	WAVETEK	A110-404	1	SW2
41	MISCELLANEOUS				
42	CONNECTOR PINS	ELCO	52-5201-0213	16	
43	BNC	KINGS	UG657/U	5	
44	BINDING POST	JOHNSON	111-103	2	
45	STANDOFF	WAVETEK	A110-304A	5	
46	STANDOFF	WAVETEK	A110-311	2	
47	SOLDER LUG	H H SMITH	1414-B	1	
48	PANEL NUT	EF JOHNSON	120165	2	

4. USE 150pf (DD151) CAPACITOR AT C11 FOR RACKMOUNT ONLY
3. R34, R36, R37 & R38 NOT USED IN BATTERY MODELS. ALSO Q13 NOT USED
2. R17, R18, R21, R28, R29, R36, R37 R38.
1. R1, R3, R5, R7, R9, R31.

NOTES: UNLESS OTHERWISE SPECIFIED

REV	ECN	BY	DATE	APP
E	1206		2-9-73	
D	785	E.	12/28/73	
C	546	S	5-12-73	
B	567		1/22/73	
A	533		12/17/72	S

TOLERANCE UNLESS OTHERWISE SPEC
.XXX ± .010
.XX ± .030
ANGLES ± 0°30'

WAVETEK SAN DIEGO, CALIFORNIA

SCALE 2/1 | BY B. REDMAN | DATE 6-15-72 | APP

MATERIAL —"—

FINISH —"—

TITLE ASSEMBLY, 1ST SUB-PANEL BD

MODEL NO. 110 | DWG NO. B110-042 | SHEET 1 OF 2 | REV E

THIS DOCUMENT CONTAINS PROPRIETARY INFORMATION AND DESIGN RIGHTS BELONGING TO WAVETEK AND MAY NOT BE REPRODUCED FOR ANY REASON EXCEPT CALIBRATION, OPERATION, AND MAINTENANCE WITHOUT WRITTEN AUTHORIZATION.

REVISIONS			
REV	DESCRIPTION	DATE	APPROVED

PARTS LIST

LINE NO.	DESCRIPTION	MFGR	MFGR P/N	QTY	REF DES
1	FRONT SUB-PANEL BOARD	WAVETEK	B111-117F	1	
2	CAPACITORS				
3	VARIOHM 4.5 TO 25PF	ERIE	503-001-37A	2	C1,C5
4	SILVER MICA 500V,5% 75pf	ARCO	DM 15-750J	1	C2
5	SILVER MICA 500V,1%,910pf	ARCO	DM15-5605	1	C3
6					
7	POLYSTYRENE 100V,1%,0.1PF	IMB	PA20104F	1	C6
8	MYLAR 200V,10%,502PF	A-R	WAVTK-2MFW	1 SET	C7
9	CERAMIC 1000V,10%,470PF	CRL	DD-471	1	C8
10	CERAMIC 1000V,10% 0.001PF	CRL	DD-102	1	C9
11	CERAMIC 1000V,10%,680PF	CRL	DD-681	2	C10,C11
12	CERAMIC 1000V,10% 47pf (NOM)	CRL	DD-470	1	C12
13	CERAMIC 1000V,10% 100PF	CRL	DD-101 △3	1	C13
14	CERAMIC 1000V, 10% 220PF	CRL	DD-221	1	C14
15	CERAMIC 1000V,10%,330PF	CRL	DD-331	1	C15
16	CERAMIC 1000V,10%,10PF	CRL	DD-100	1	C16
17	CERAMIC 1000V,10%,22PF	CRL	DD-220	1	C17
18	RESISTORS				
19	CARBON 1/2W, 5%, 470Ω	STACK	RC20GF471J	3	R1,R37 249
20	CARBON 1/2W,10%,220Ω	STACK	RC20GF221K	1	R2
21	METAL FILM 1/4W,1%,4.32K	CORNING	RN60D	1	R3
22	METAL FILM 1/4W,1%,6.98K	CORNING	RN60D	2	R5,R13
23	METAL FILM 1/4W,1%,3.01K	CORNING	RN60D	2	R7,R15
24	METAL FILM 1/4W,1% 69.8K	CORNING	RN60D	3	R9,R17 R25
25	METAL FILM 1/4W, 1%, 30.1K	CORNING	RN60D	3	R11, R19,R26
26	METAL FILM 1/4W,1%,698K	CORNING	RN60D	2	R21,R27

SHEET 1 OF 3

PARTS LIST

LINE NO.	DESCRIPTION	MFGR	MFGR P/N	QTY	REF DES
27	METAL FILM, 1/4W, 1%,301K	CORNING	RN60D	2	R23,R28
28	CARBON 1/2W,5%,3K	STACK	RC20GF302J	1	R24
29	POTENTIOMETER, 1K	WAVETEK	A113-402	2	R29,R39
30	CARBON 1/2W,5%, 11K	STACK	RC20GF113J	1	R30
31	METAL FILM 1/4W,1%,49.9Ω	CORNING	RN60D	10	△1
32	CARBON 1/2W,10%,33Ω	STACK	RC20GF330K	1	R35
33	CARBON 1/2W,10%,56Ω	STACK	RC20GF560K	1	R36
34	CARBON 1/2W,5%,2K	STACK	RC20GF202J	1	R38
35	CARBON 1/2W,5%,4.7Ω	STACK	RC20GF4R7J	2	R40,R56
36	POTENTIOMETER, 1K	WAVETEK	A110-408	1	R41
37	METAL FILM 1/4W, 1%,21.5Ω	CORNING	RN60D	1	R42
38	CARBON 1/2W,5%,560Ω	STACK	RC20GF561J	1	R45
39	CARBON 1/2W,10%,27Ω	STACK	RC20GF270K	1	R46
40	METAL FILM, 1/8W,1%,30.1K	CORNING	RN55D	1	R47
41	METAL FILM 1/4W,1%,8.25K	CORNING	RN60D	1	R48
42	METAL FILM, 1/8W,1%,2.87K	CORNING	RN55D	1	R50
43	CARBON 1/2W,5%,1K	STACK	RC20GF102J	3	R51,R52 R53
44	CARBON 1/2W, 10%, 1.2K	STACK	RC20GF122K	1	R54
45	CARBON 1/2W,5%,10Ω	STACK	RC20GF100J	1	R55
46	TRIM			11	△1
47	SWITCHES				
48	RANGE SWITCH	WAVETEK	A110-405	1	SW1
49	FUNCTION SWITCH	WAVETEK	A111-403	1	SW3
50	MISCELLANEOUS				
51	CONNECTOR PINS	ELCO	52-5201-0213	20	
52	BNC	KINGS	UG657/U	6	
53	BINDING POST	JOHNSON	111-103	4	
54	STANDOFF	WAVETEK	A110-304A	3	
55	STANDOFF	WAVETEK	A110-311A	2	
56	WAFER	WAVETEK	110-SW1-2	2	
57	SOLDER LUG	H.H. SMITH	1414-B	1	
58	PANEL NUT	E.F. JOHNSON	120165	4	

△3 CHANGE R13 FROM 100pf to 150pf ON RACK MOUNT UNITS ONLY.

△2 R31, R32, R33, R34, R43, R44, R57 R58, R59, R60.

△1 R4, R6, R8, R10, R12, R14, R16, R18, R20, R22, R50

NOTE: UNLESS OTHERWISE SPECIFIED

REV	ECN	BY	DATE	APP
E	Dwg & Dwg changed	E	2-27-73	
D	1203	RO	2-4-73	
C	1130	BA	11-5	
B	ECN 785		12/14/70	
A	ECN 533, 87 units & redrawn		12/14/70	S

TOLERANCE UNLESS OTHERWISE SPEC
XXX ± .010
XX ± .030
ANGLES ± 0°30'

WAVETEK SAN DIEGO, CALIFORNIA

SCALE —

MATERIAL —

FINISH —

BY S. REDMAN DATE 6/15/72 APP

TITLE ASSEMBLY 1ST SUB PANEL BD.

MODEL NO. 111 DWG NO. B111-042 SHT 3 OF 3 REV E

THIS DOCUMENT CONTAINS PROPRIETARY INFORMATION AND DESIGN RIGHTS BELONGING TO WAVETEK AND MAY NOT BE REPRODUCED FOR ANY REASON EXCEPT CALIBRATION, OPERATION, AND MAINTENANCE WITHOUT WRITTEN AUTHORIZATION.

PARTS LIST 110 RM

LINE NO.	DESCRIPTION	MFGR	MFGR P/N	QTY	REF DES
1	CONNECTOR MOUNTING BOARD	WAVETEK	C110-540	1	
2	STANDOFF	WAVETEK	A110-304	4	
3	CAPACITOR				
4				1	
5	CERAMIC 1000V, 10%, 680PF	CRL	DD681	1	C2
6	RESISTOR				
7	METAL FILM 1/4W, 1%, 49.9Ω	CORNING	RN60D49R9F	2	R2
8					
9	MISCELLANEOUS				
10	BNC CONNECTOR	KING	UG657/U	6	

REV	ECN	BY	DATE	APP
A	567	Shock	1/23/73	

TOLERANCE UNLESS OTHERWISE SPEC
.XXX ± .010
.XX ± .030
ANGLES ± 0°30'

WAVETEK SAN DIEGO, CALIF.

SCALE —

BY Shock DATE 6-21-72 APP

MATERIAL —

TITLE BOARD ASSEMBLY, REAR CONNECTOR

FINISH —

MODEL NO. 110RM DWG NO. C110-040 SHEET 2 OF 2 REV A

THIS DOCUMENT CONTAINS PROPRIETARY INFORMATION AND DESIGN RIGHTS BELONGING TO WAVETEK AND MAY NOT BE REPRODUCED FOR ANY REASON EXCEPT CALIBRATION, OPERATION, AND MAINTENANCE WITHOUT WRITTEN AUTHORIZATION.